CAD Exercises

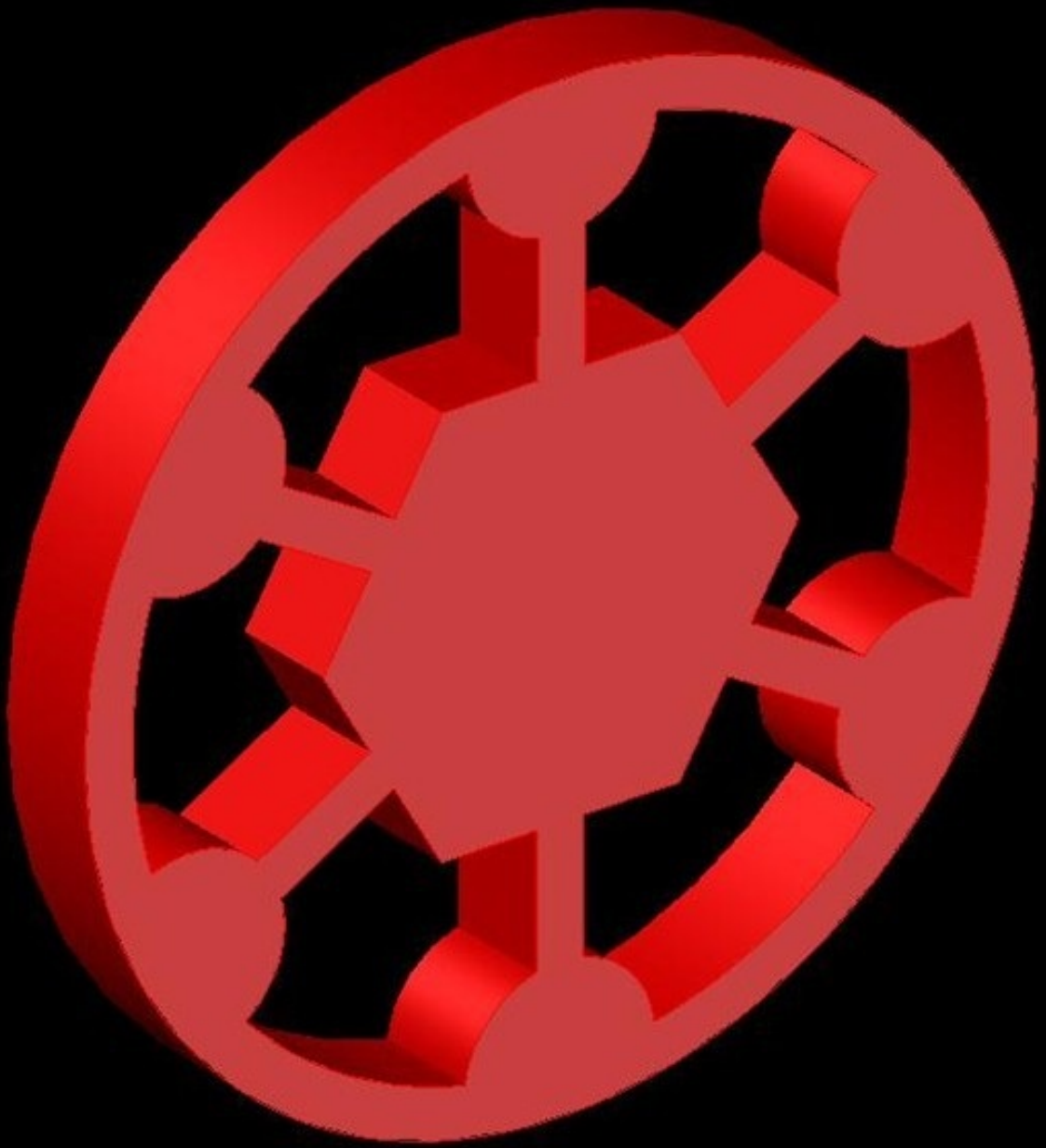

Sachidanand Jha

Preface

The primary goal of this book is to provide CAD practice exercises for beginners. This book contains 100 2D exercises and 50 3D exercises. Each exercise can be designed on any CAD software such as AutoCAD, SolidWorks, Catia, PTC Creo Parametric, Siemens NX, Autodesk Inventor, Solid Edge, DraftSight and other CAD programs. These exercises are designed to help you test out your basic CAD skills. Each exercise can be assigned separately. No exercise is a prerequisite for another. All dimensions are in mm.

Disclaimer

The book contains 100 2D and 50 3D exercises to enable you practice what you learn. The exercises range from easy to expert level. These exercises are not tutorials. It is a practice book. You can use these exercises to improve your skills in any CAD software.

No part of this publication may be reproduced, stored in a retrieval system or transmitted in any form or

By any means electronic, mechanical, photocopying, recording or sold in whole or in part in any form, otherwise without the prior written Permission of the author.

All trademarks and registered trademarks appearing in this guide are the property of their respective owners.

Acknowledgments

This book would not have been possible without a great deal of support. First, I would like to thank my parents for allowing me to realize my own potential. All the support they have provided me over the years was the greatest gift anyone has ever given me. Also, I need to thank Hira Nand Jha, who taught me the value of hard work and an education. Without him, I may never have gotten to where I am today. Next, I need to thank all the people who create such a good atmosphere.

2D EXERCISES

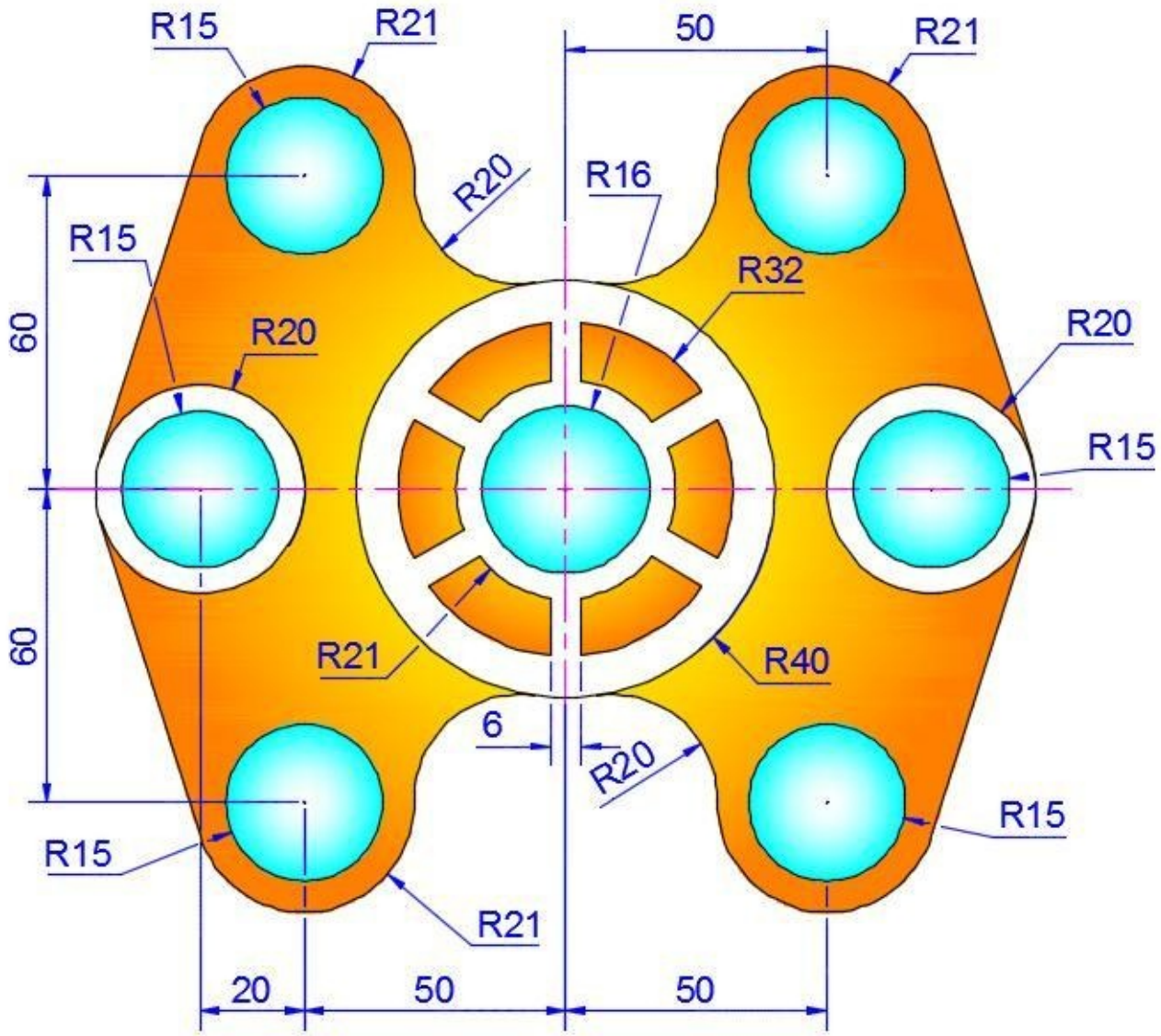
R15
R21
50
R21
R20
R16
R15
R32
60
R20
R20
R15
60
R21
R40
6
R20
R15
R15
R21
20
50
50

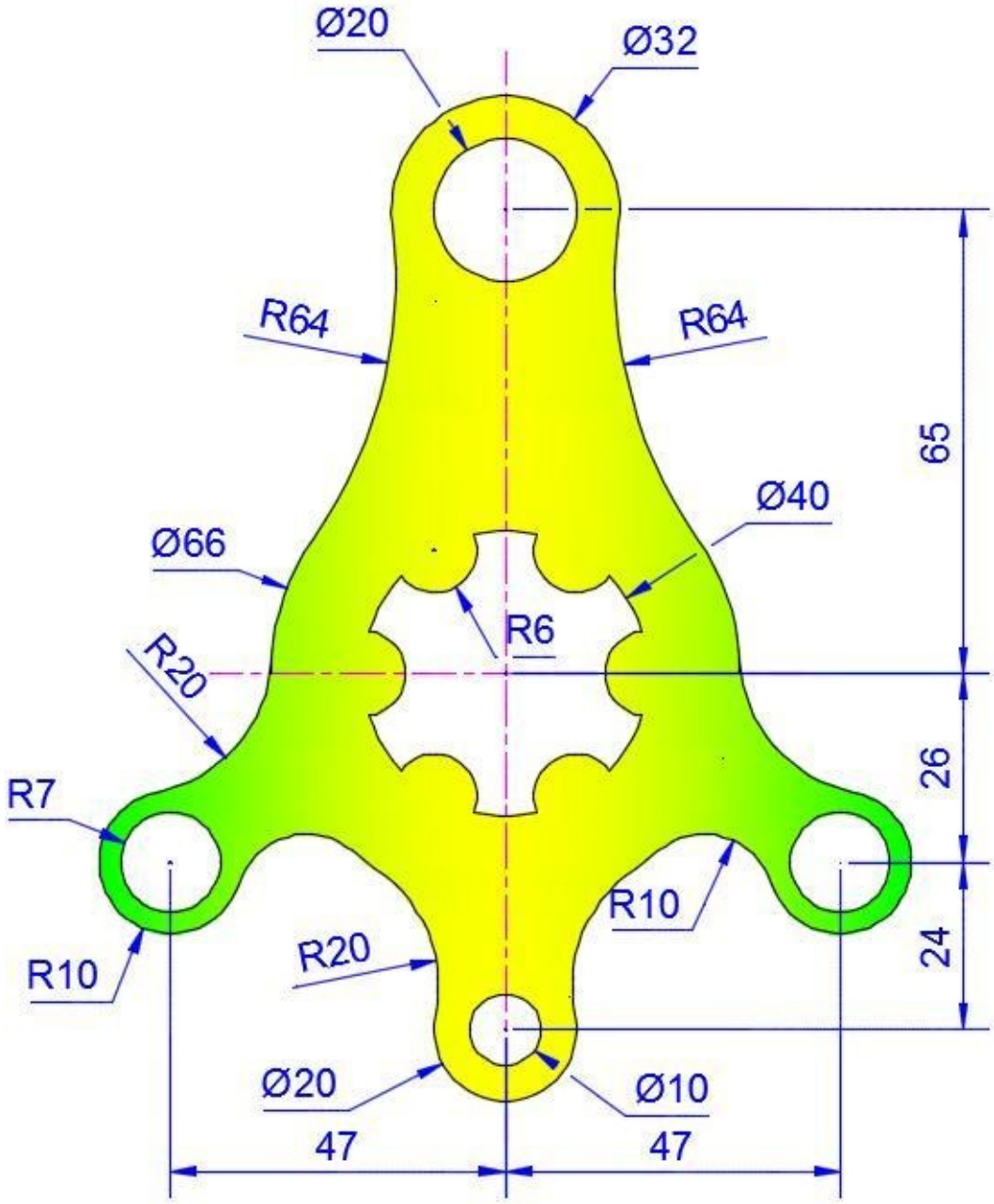
Ø20
Ø32
R64
R64
65
Ø40
Ø66
R6
R20
26
R7
R10
24
R10
R20
Ø20
Ø10
47
47

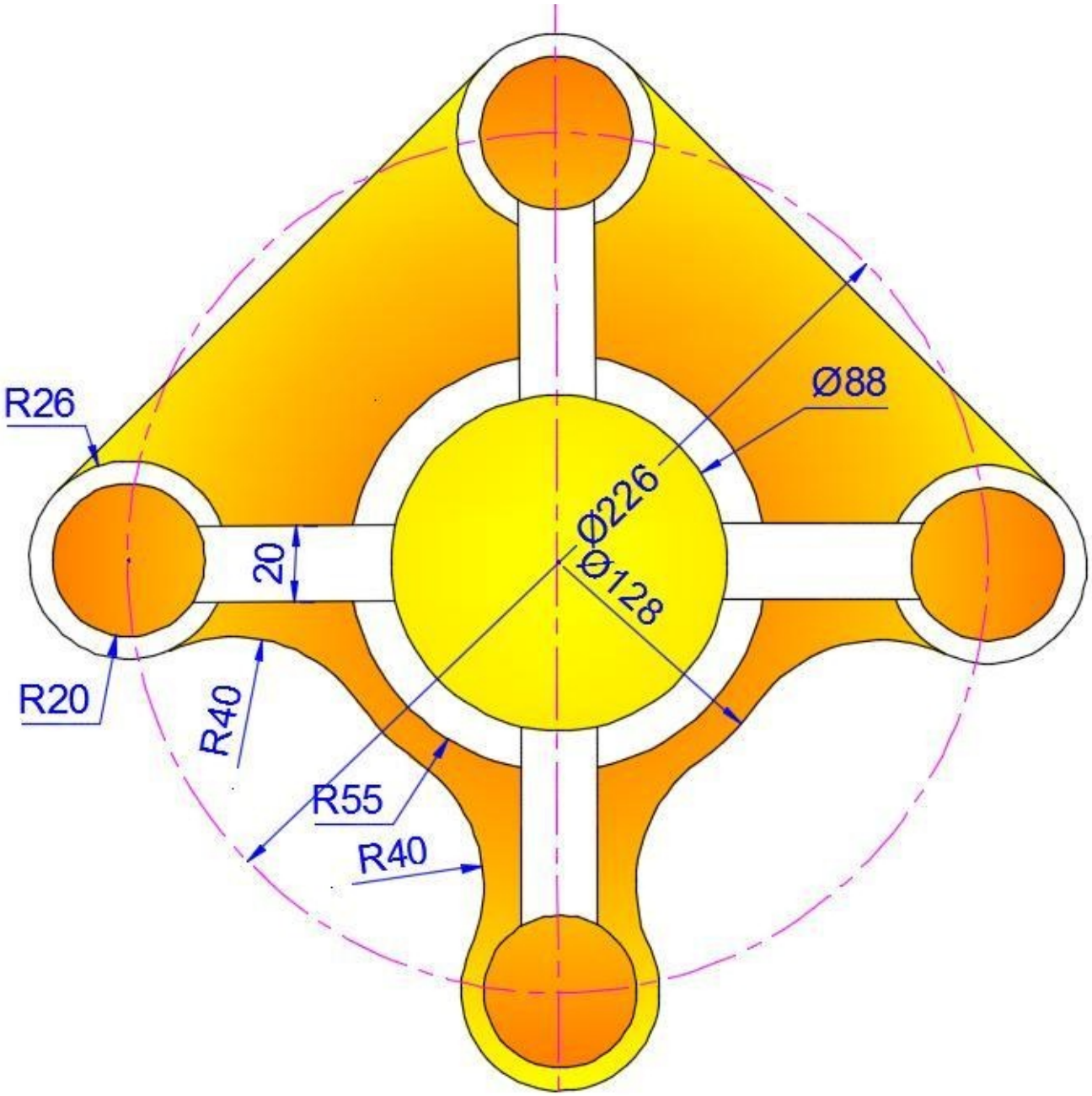
R26
Ø88
Ø226
Ø128
20
R20
R40
R55
R40

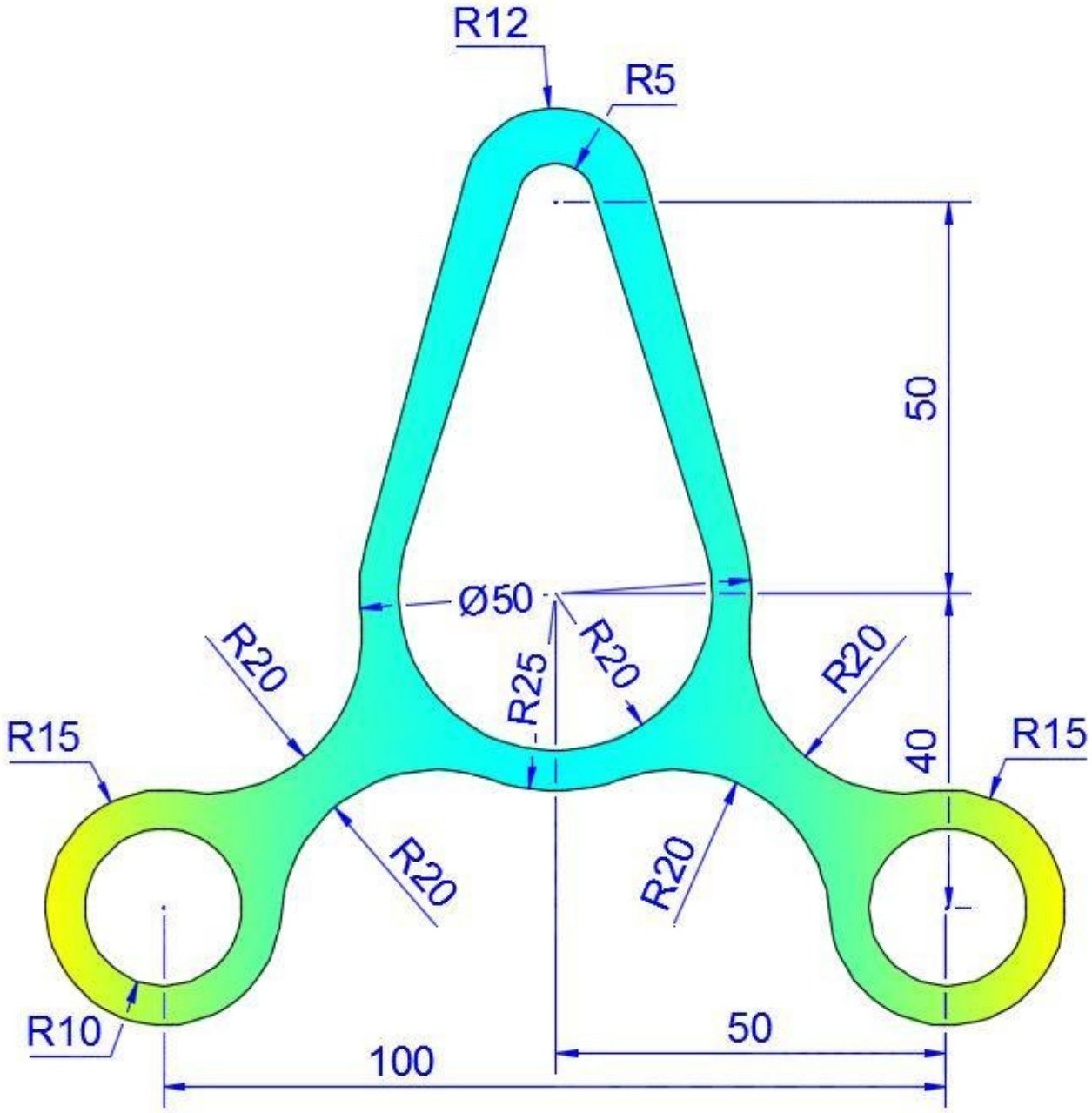
R12
R5
50
Ø50
R20
R25
R20
R20
R15
40
R15
R20
R20
R10
50
100

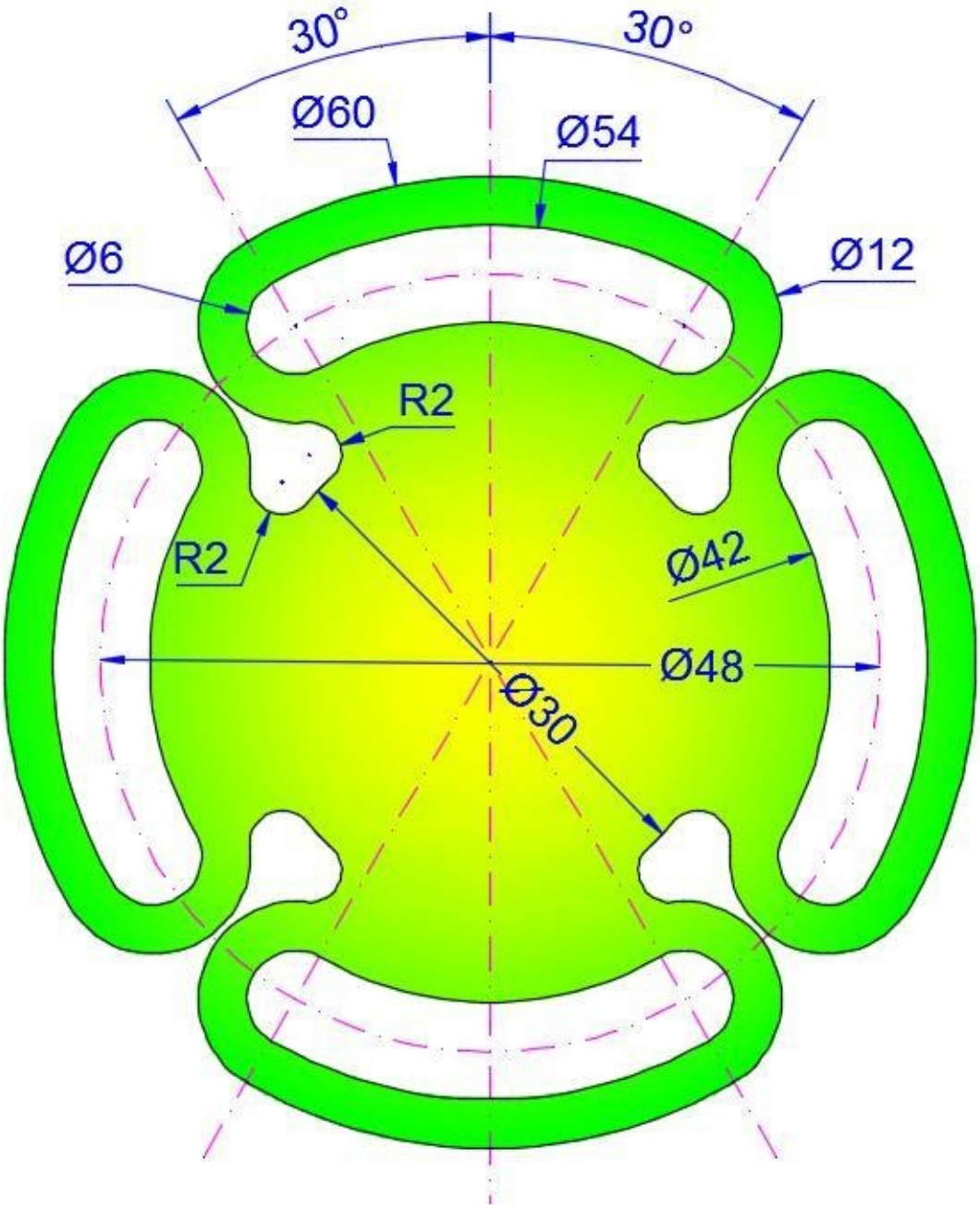
30°
30°
Ø60
Ø54
Ø6
Ø12
R2
R2
Ø42
Ø48
Ø30

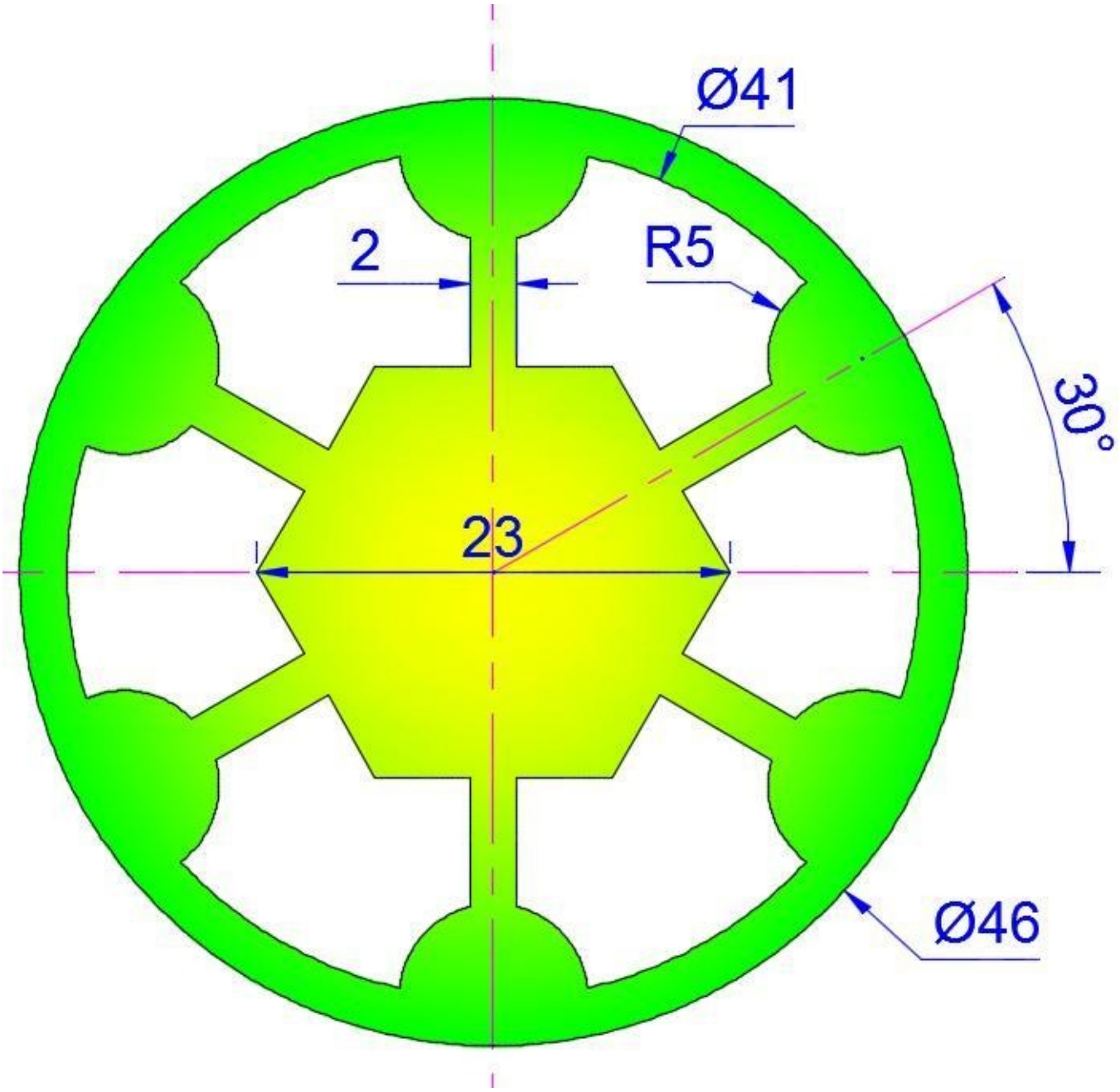
Ø41
2
R5
30°
23
Ø46

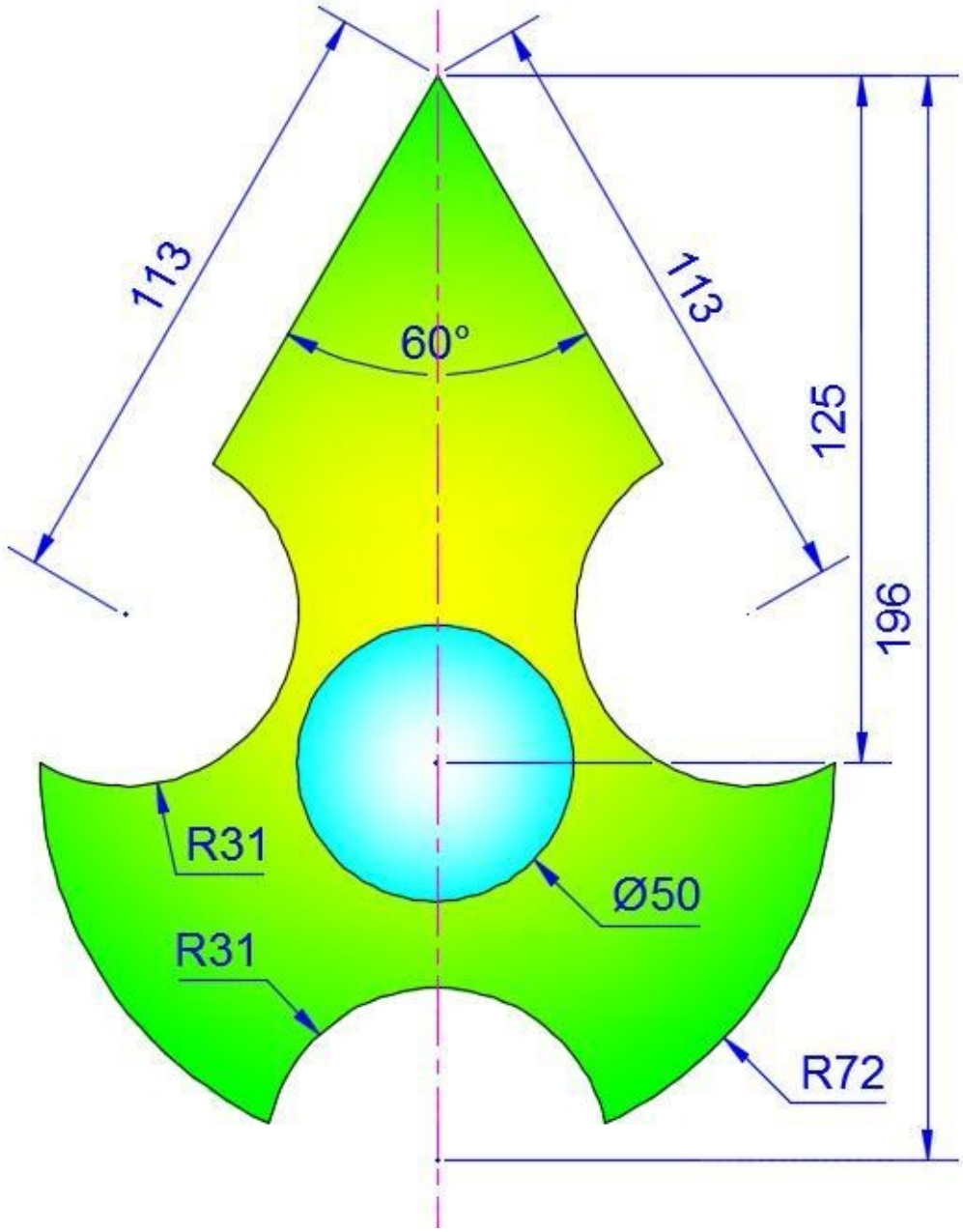
113
113
60°
125
196
R31
R31
Ø50
R72

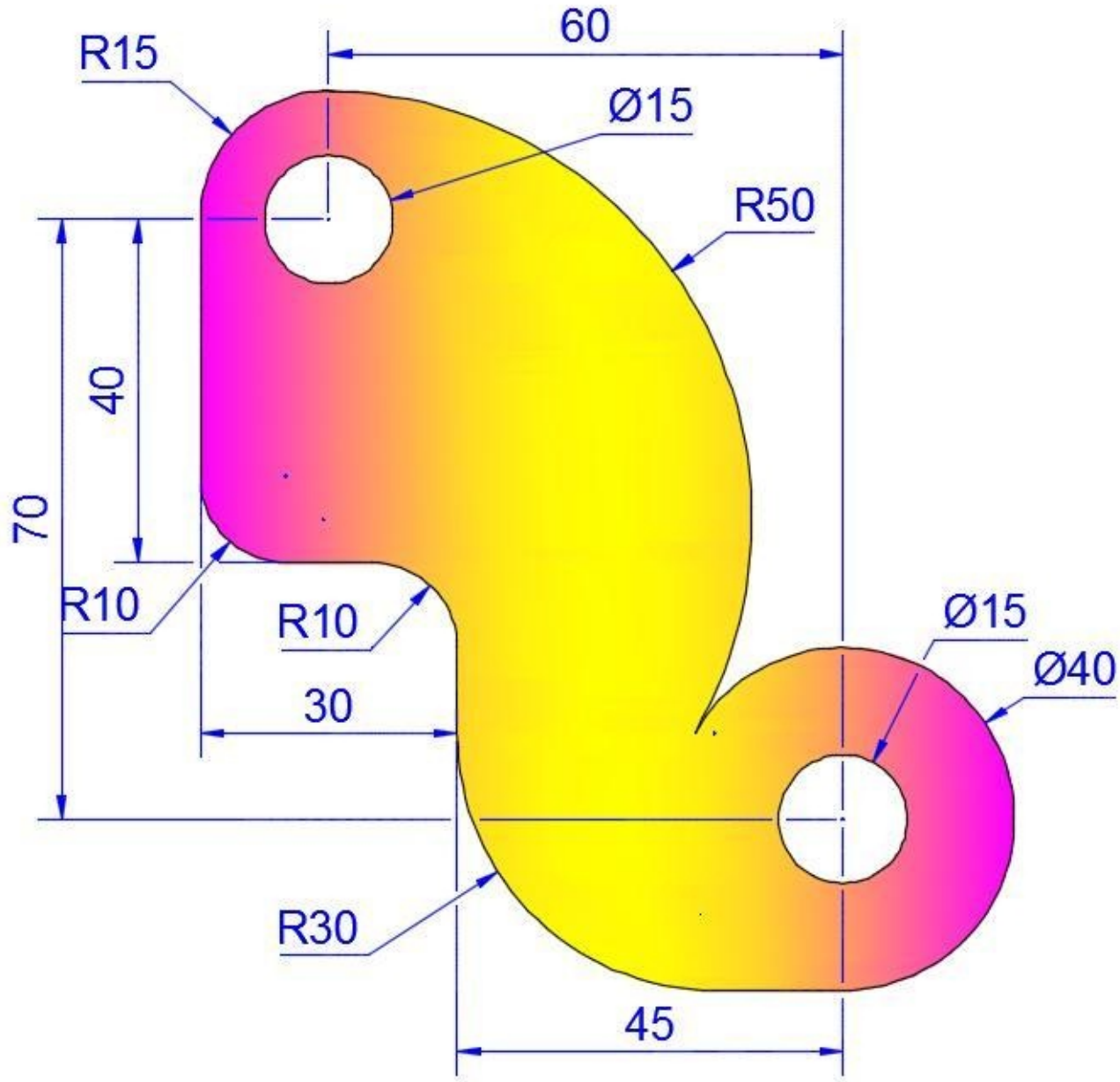
60
R15
Ø15
R50
40
70
R10
R10
Ø15
Ø40
30
R30
45

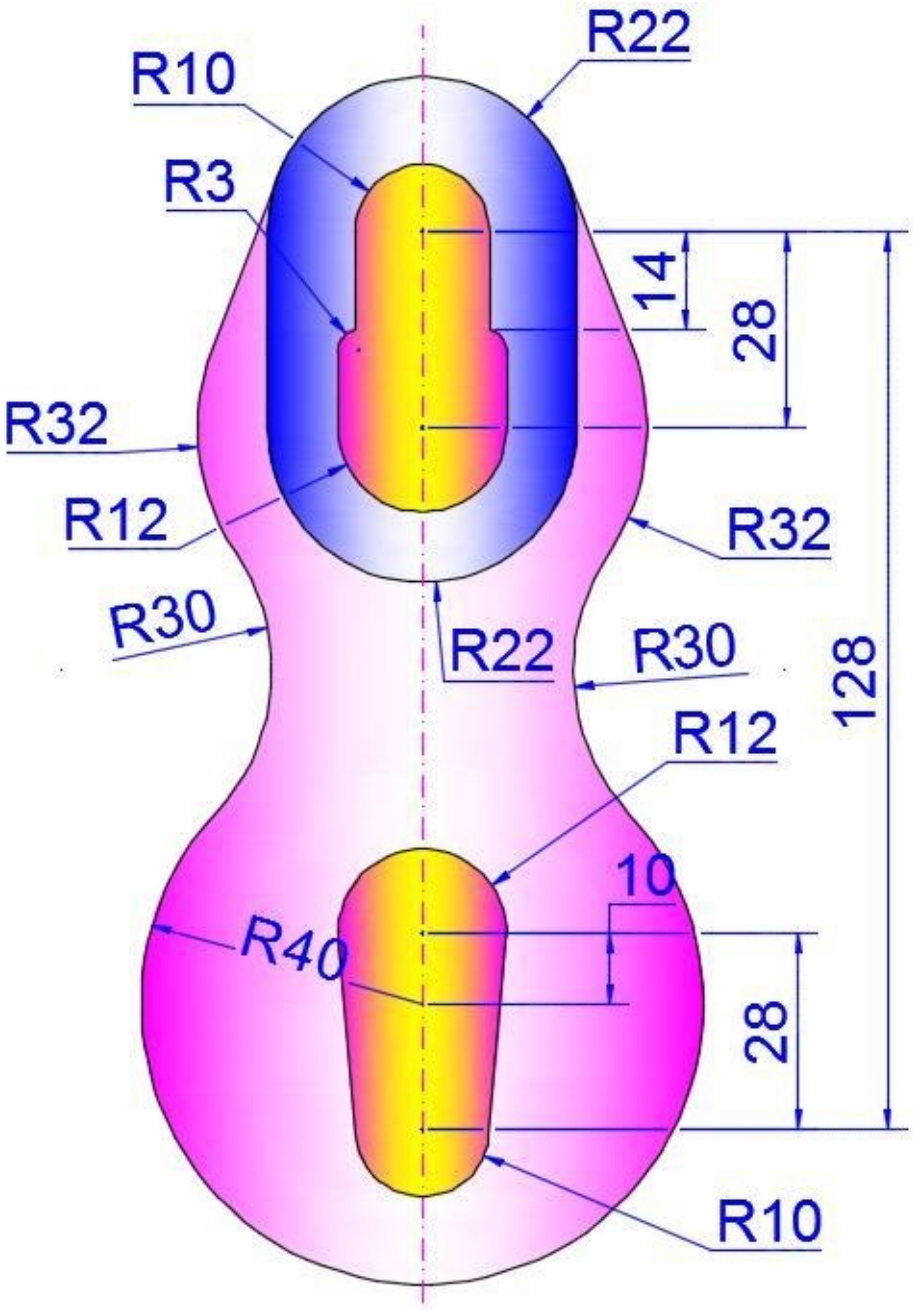
R22
R10
R3
14
28
R32
R12
R32
R30
R22
R30
128
R12
10
R40
28
R10

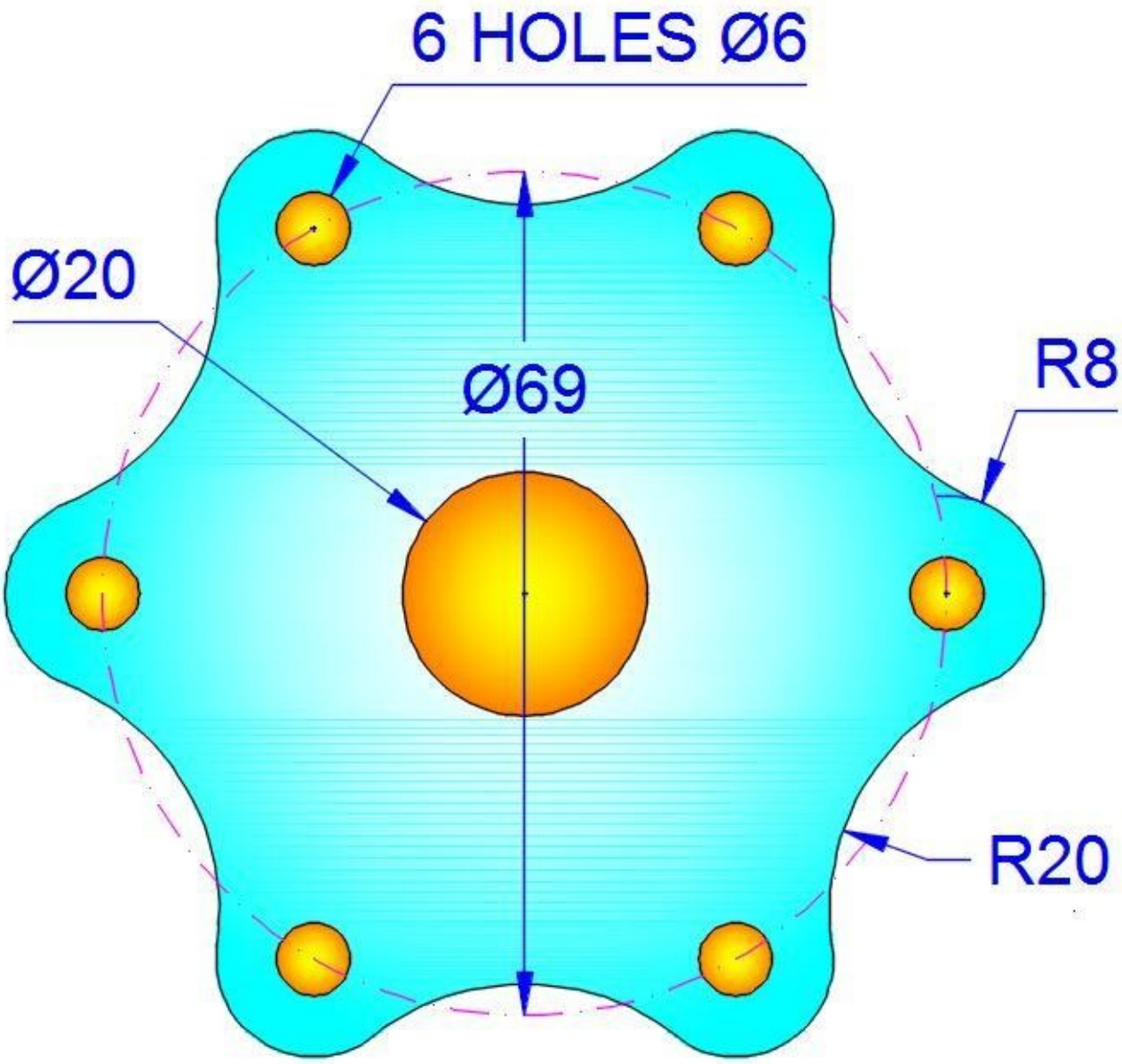
6 HOLES Ø6
Ø20
Ø69
R8
R20

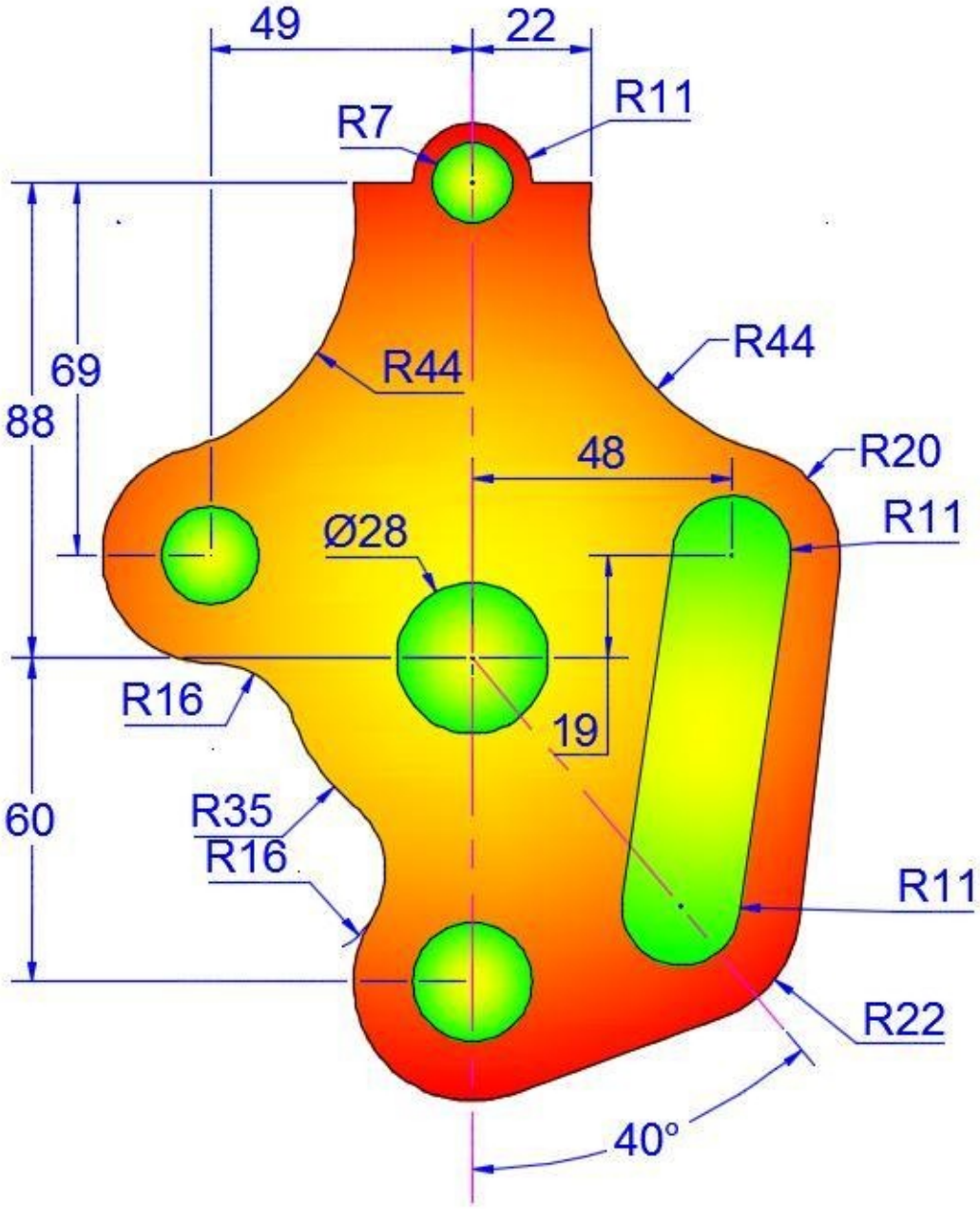
49
22
R11
R7
69
88
R44
R44
48
R20
R11
Ø28
R16
19
60
R35
R16
R11
R22
40°

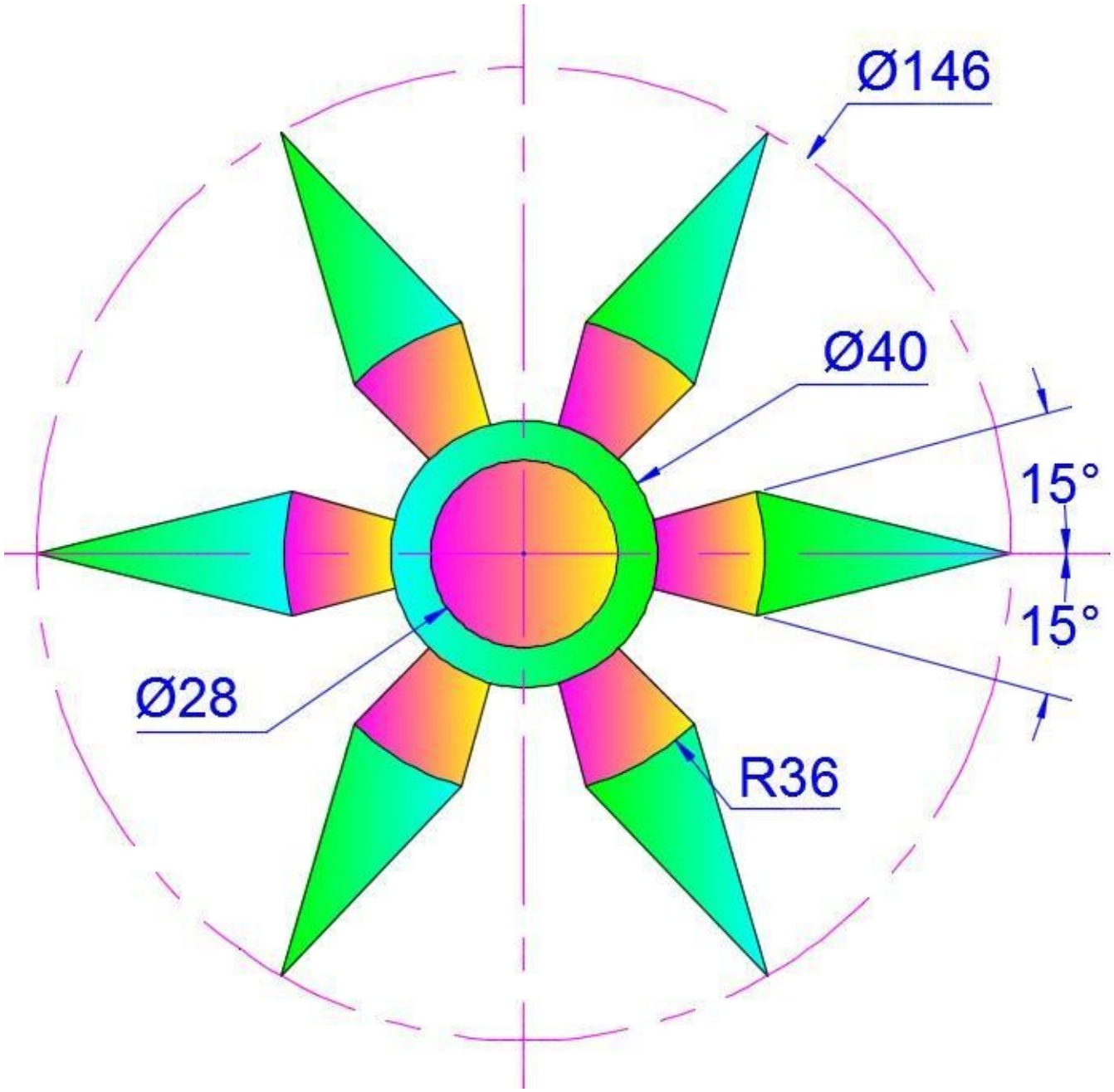
Ø146
Ø40
15°
15°
Ø28
R36

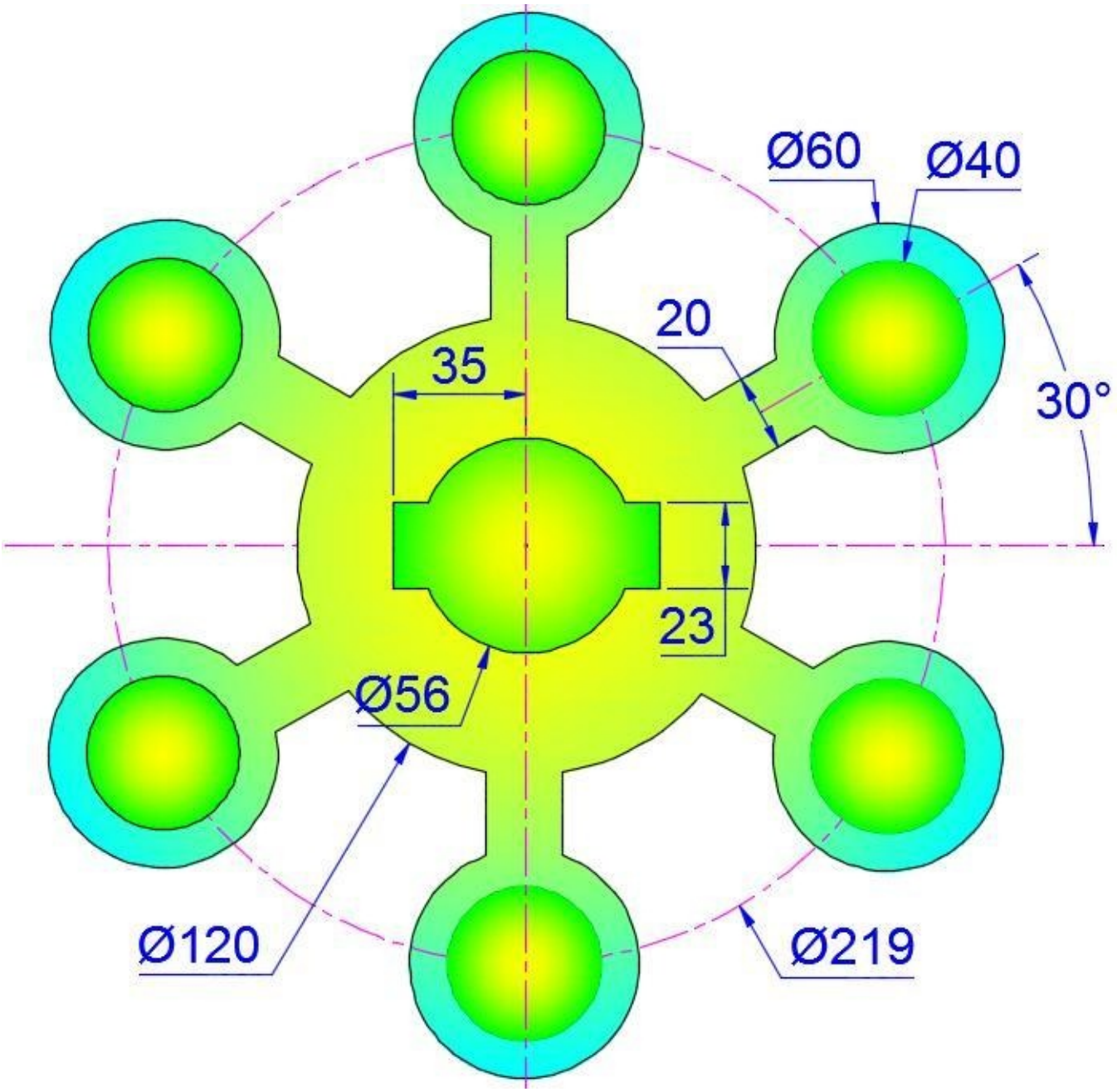
Ø60
Ø40
20
35
30°
23
Ø56
Ø120
Ø219

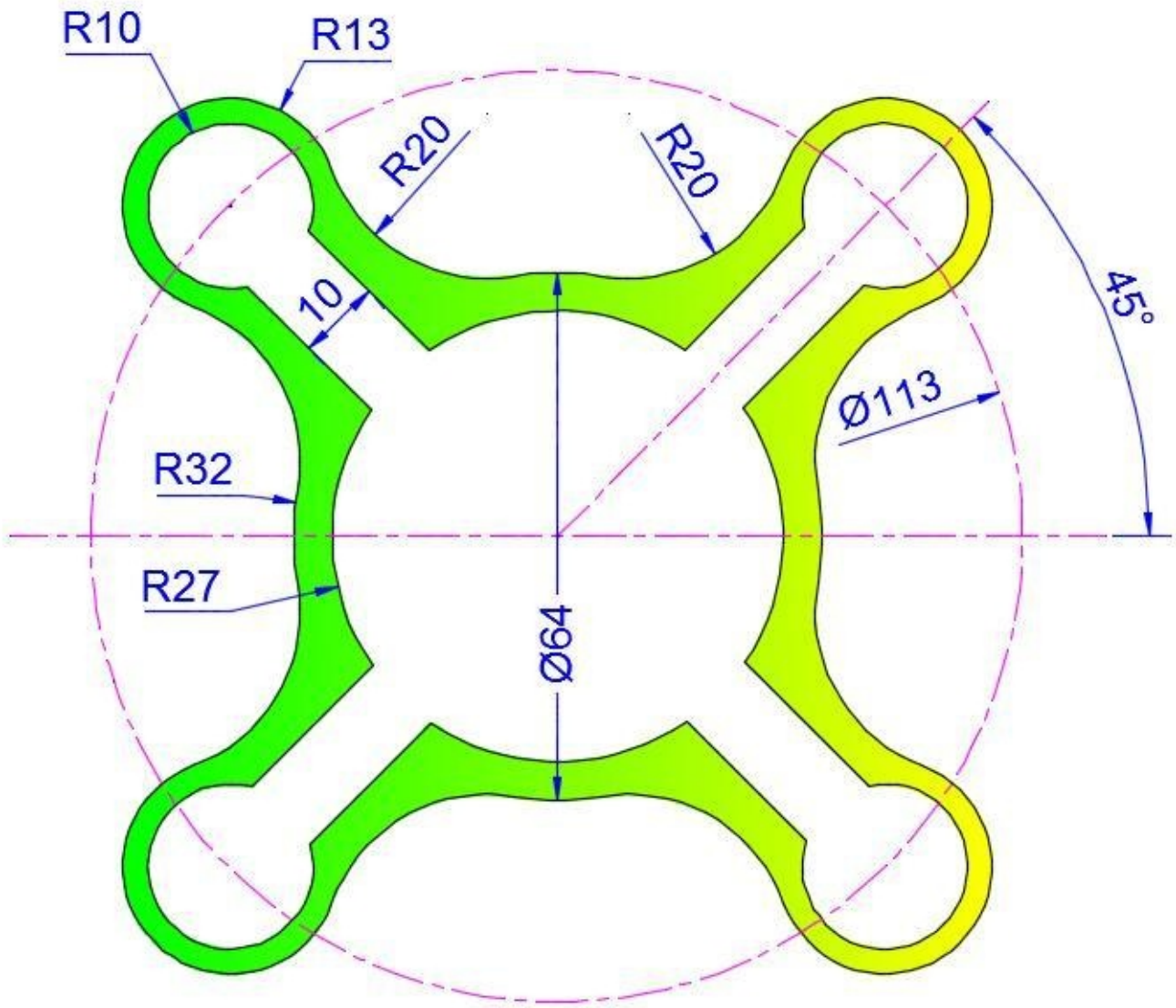
R10
R13
R20
R20
10
45°
Ø113
R32
R27
Ø64

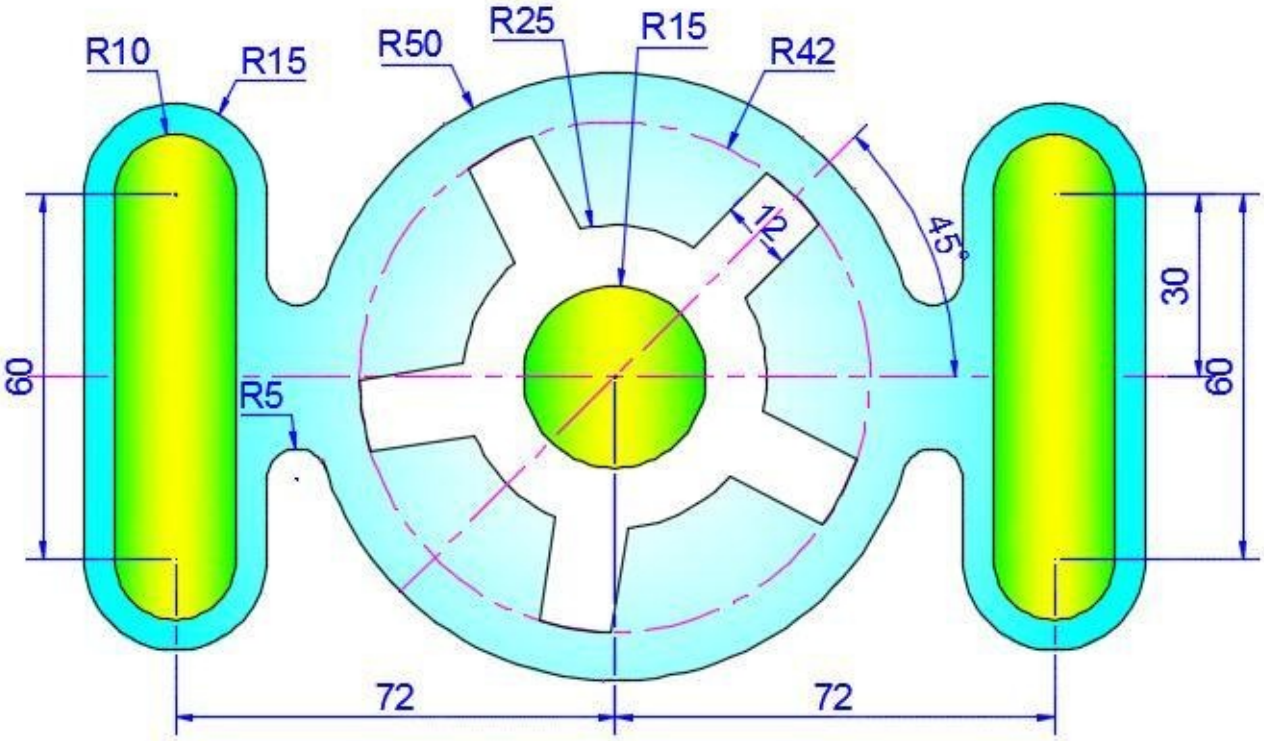
R10
R15
R50
R25
R15
R42
12
45°
30
60
60
R5
72
72

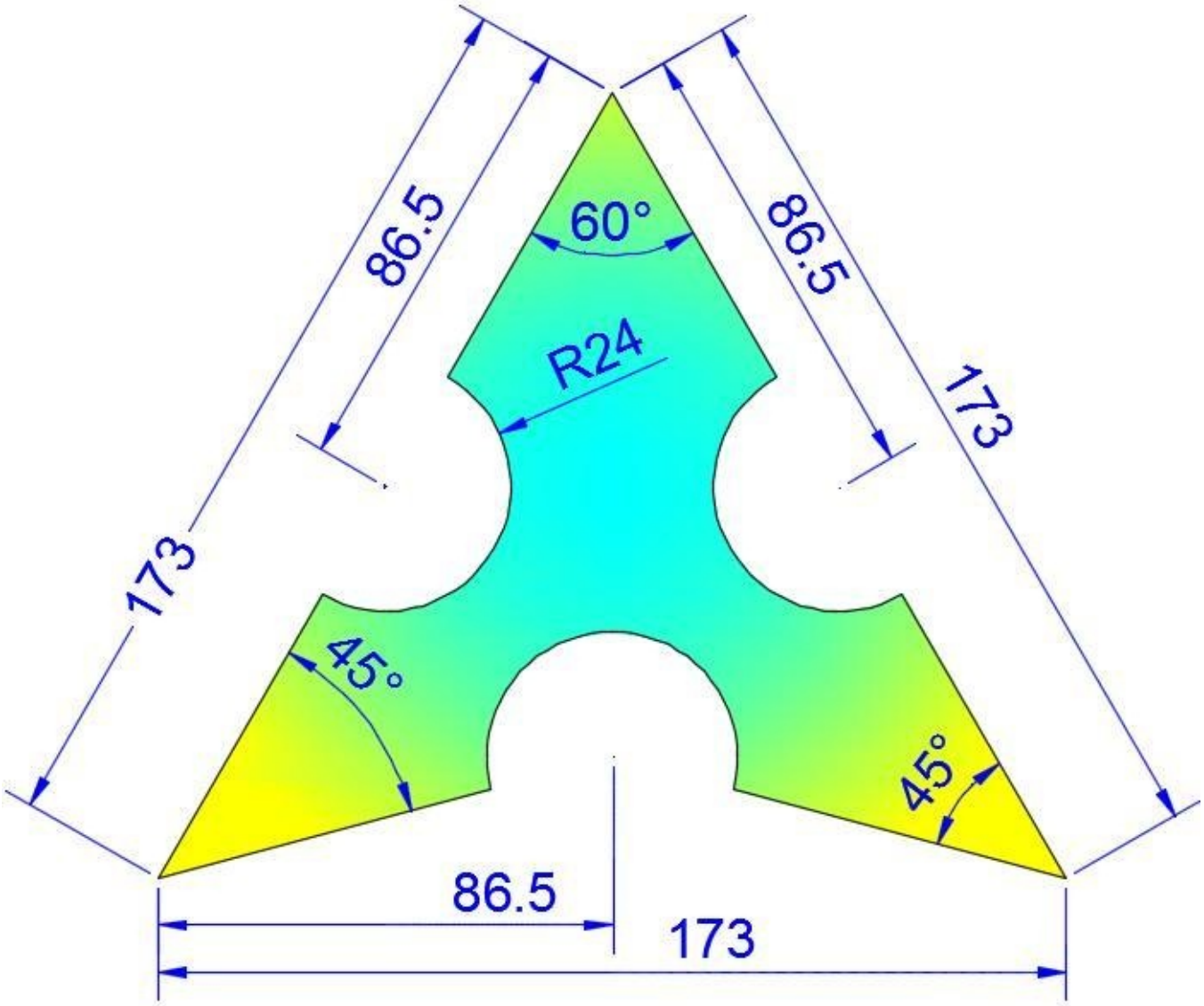
86.5
60°
86.5
R24
173
173
45°
45°
86.5
173

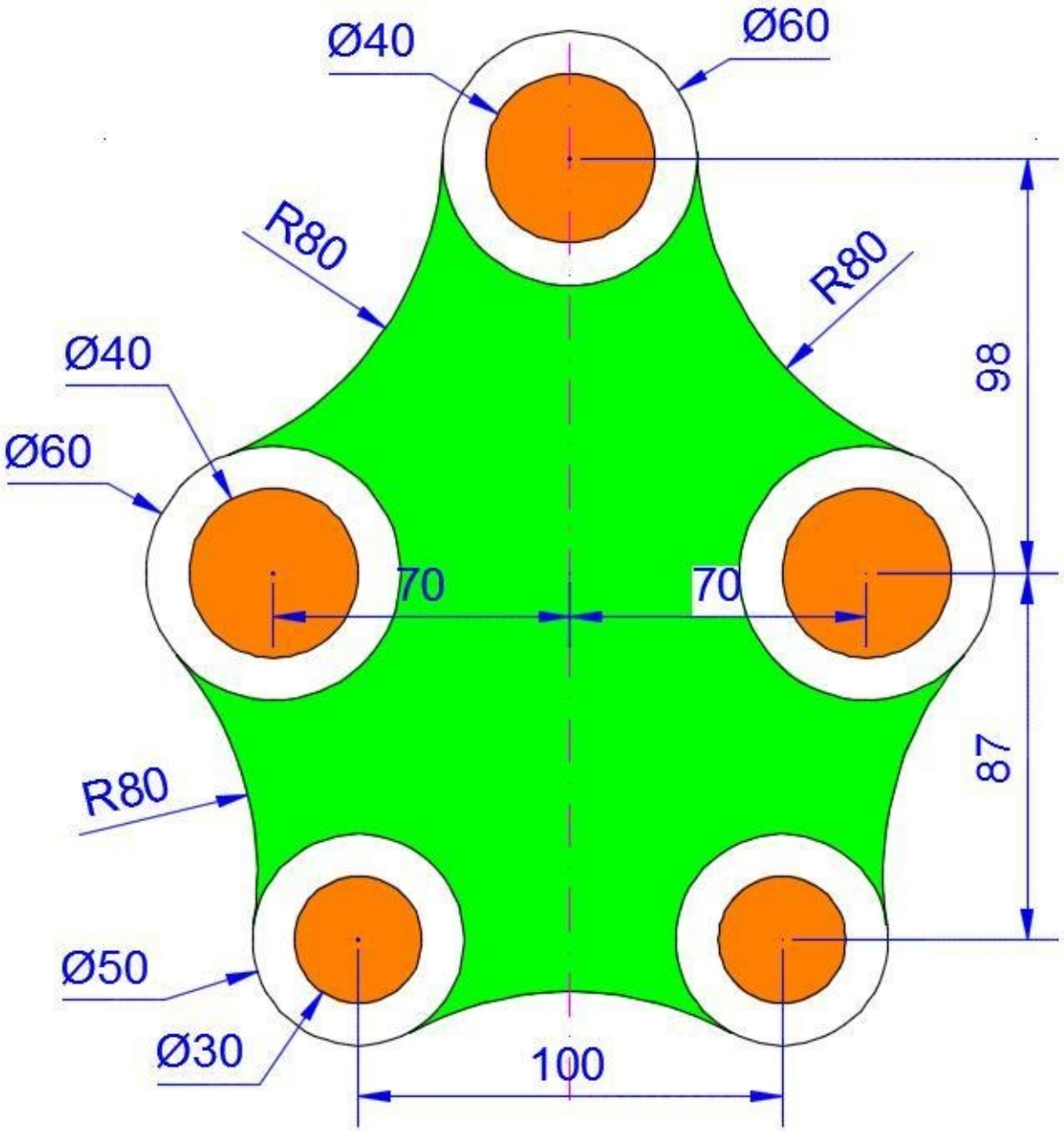
Ø40
Ø60
R80
R80
Ø40
Ø60
98
70
70
87
R80
Ø50
Ø30
100

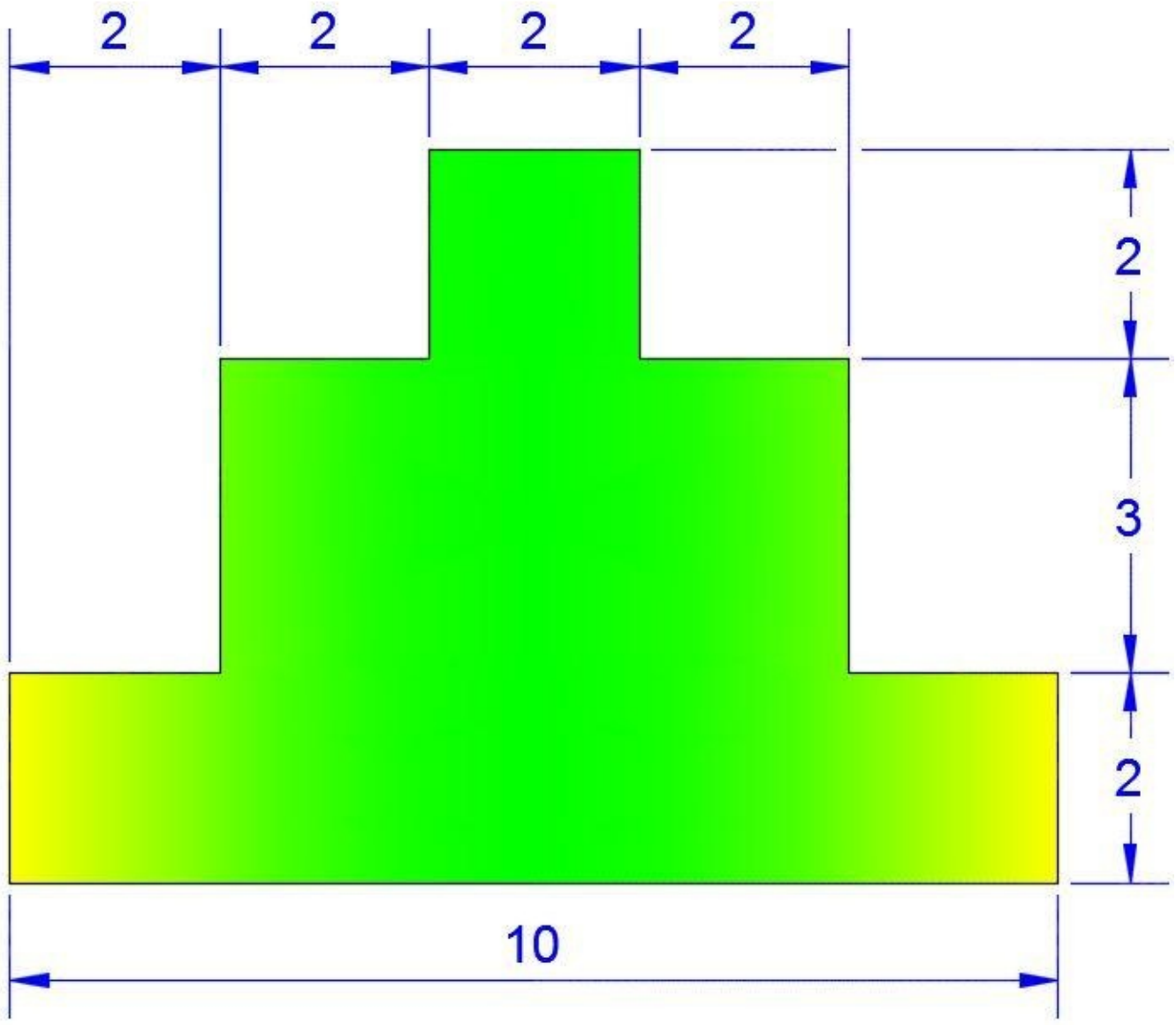
2
2
2
2
2
3
2
10

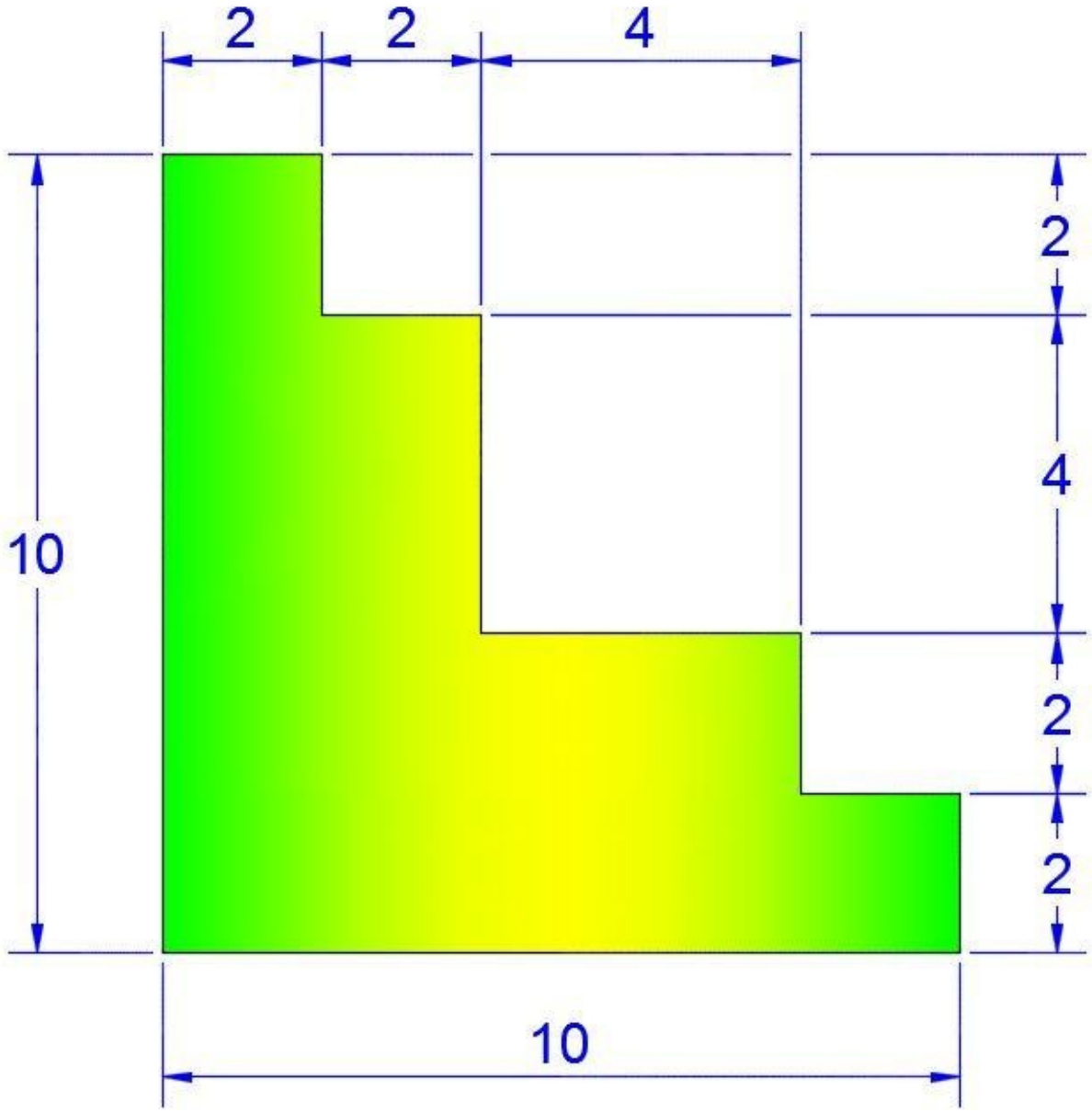
2
2
4
2
4
2
2
10
10

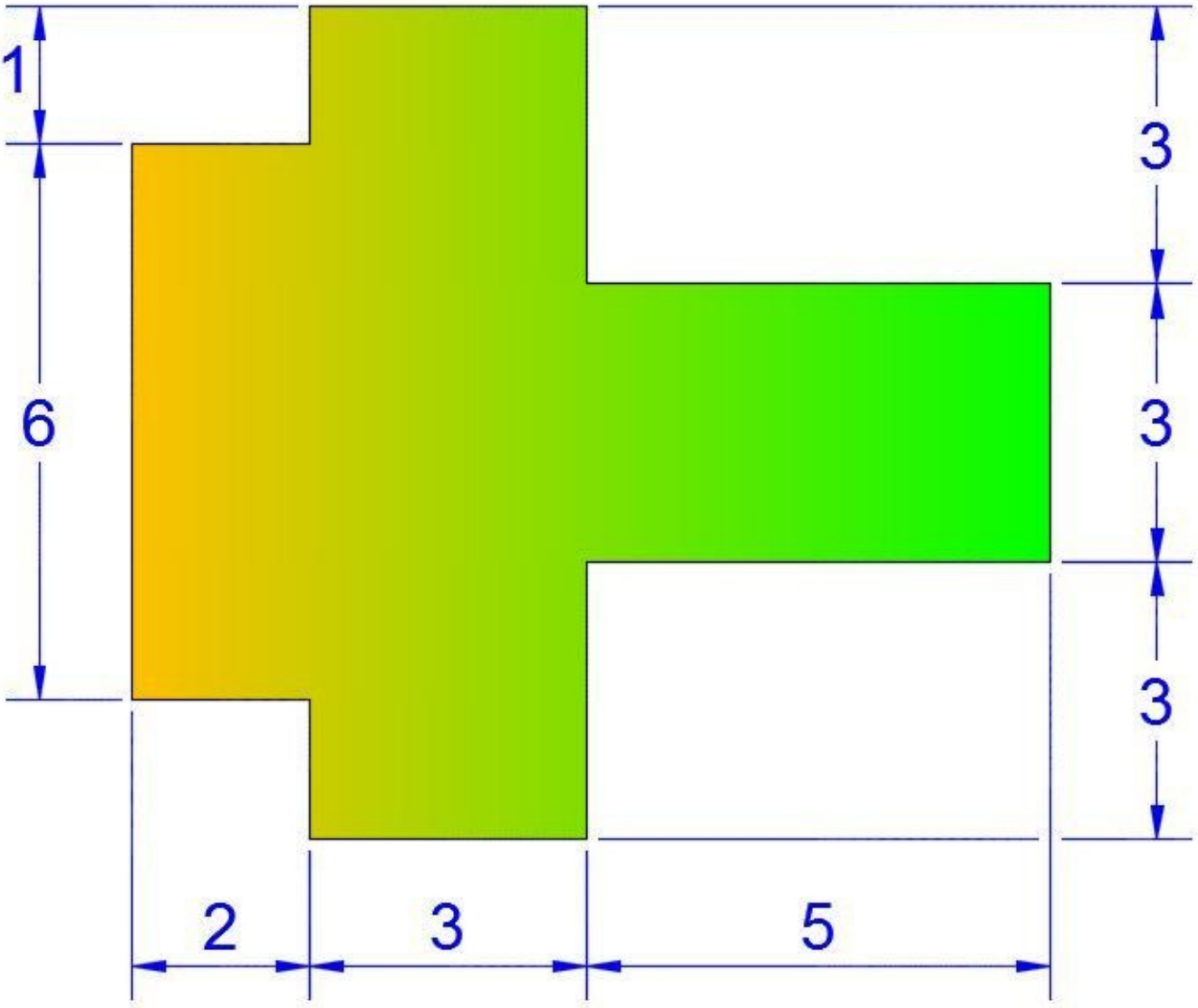
1
6
3
3
3
2
3
5

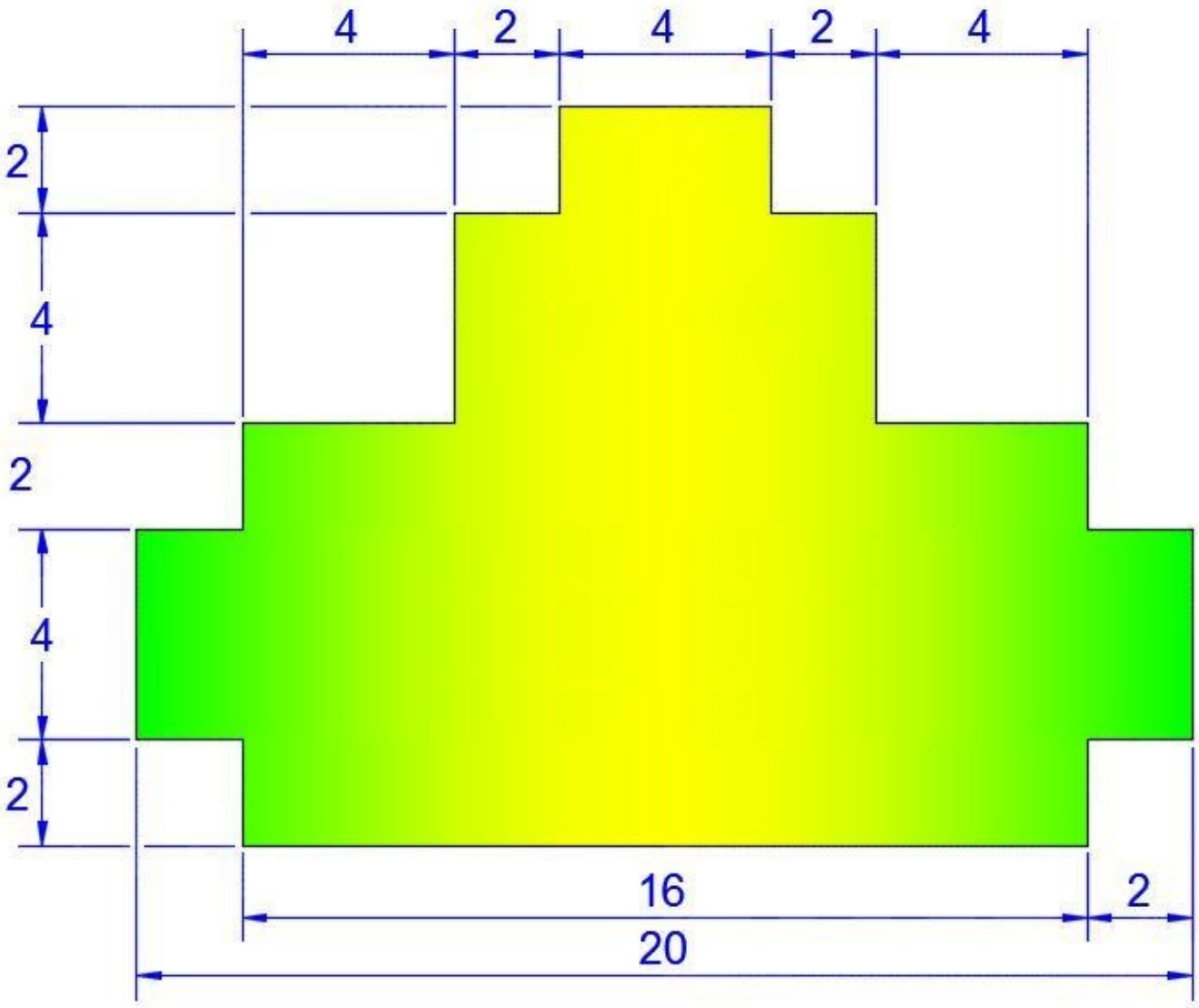
4
2
4
2
4
2
4
2
4
2
16
2
20

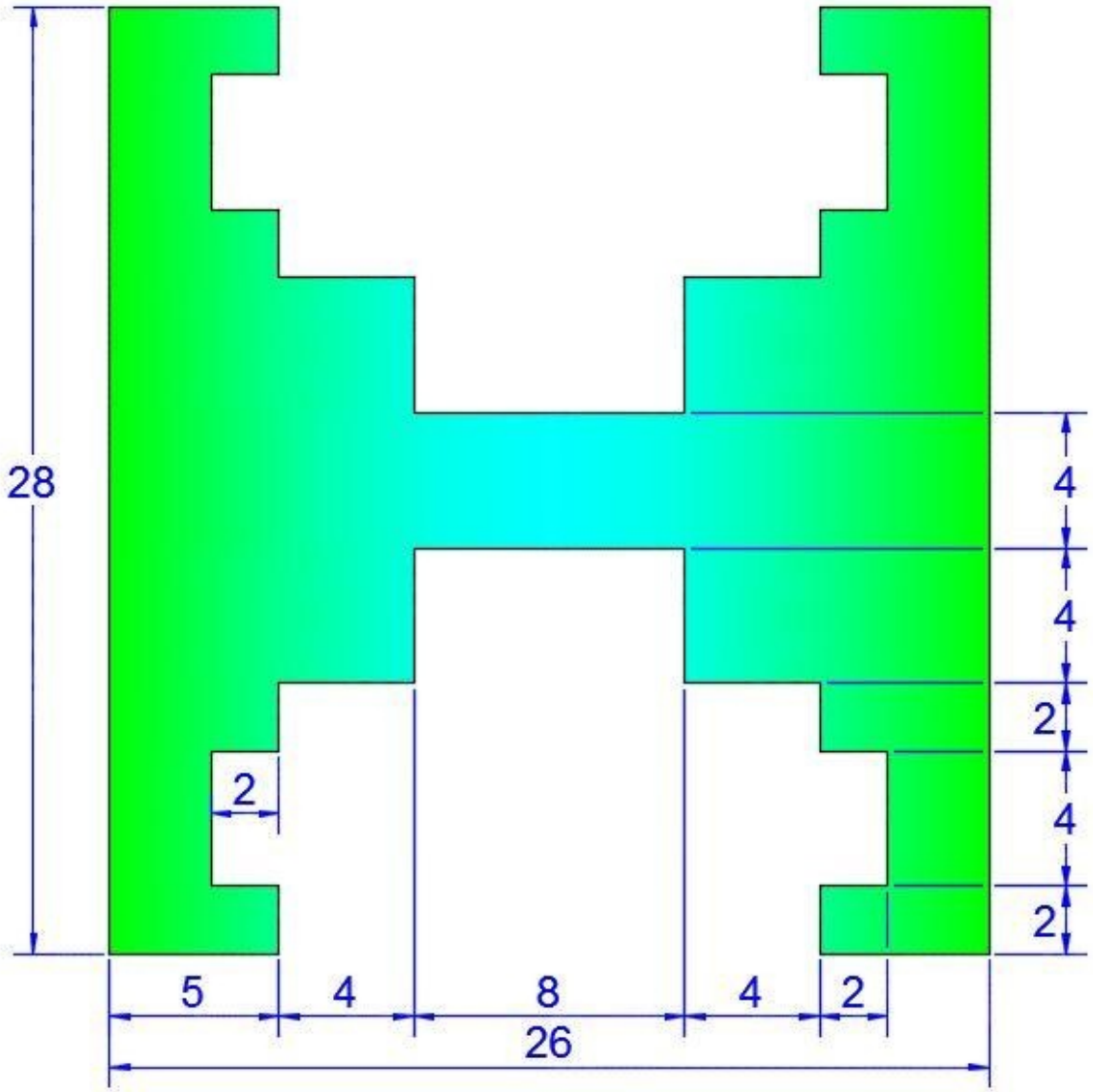
28
4
4
2
2
4
2
5
4
8
4
2
26

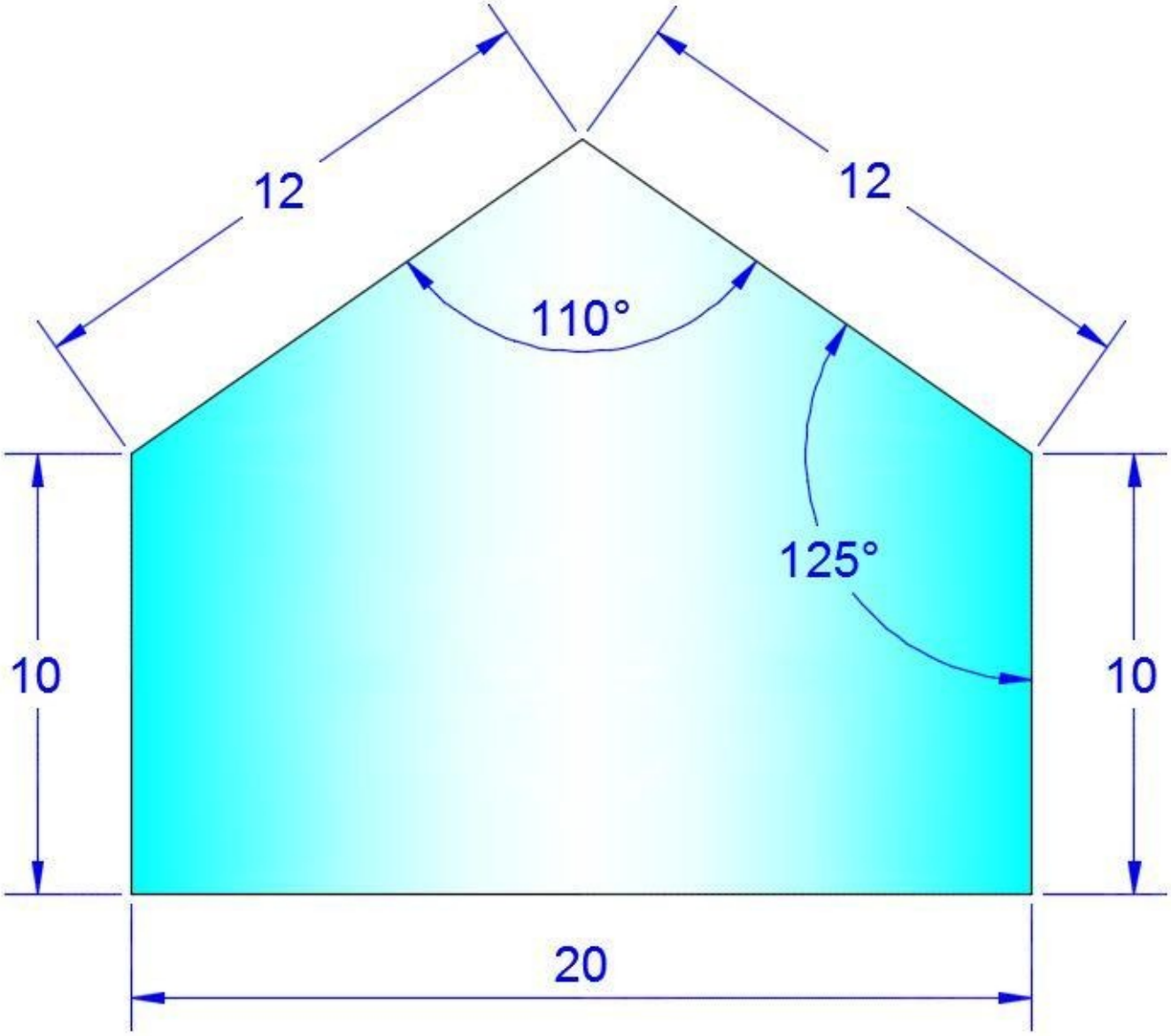
12
12
110°
125°
10
10
20

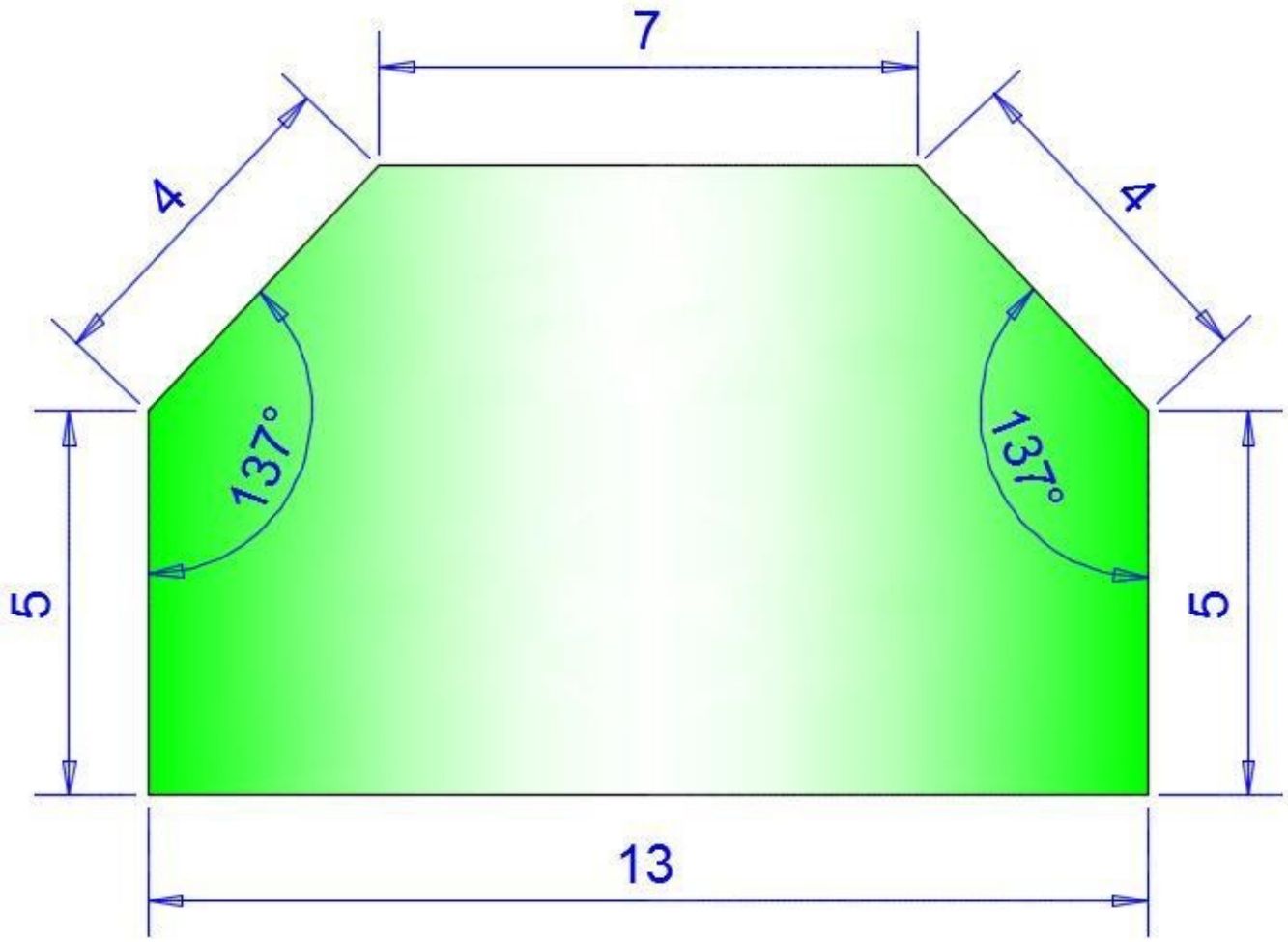
7
4
4
137°
137°
5
5
13

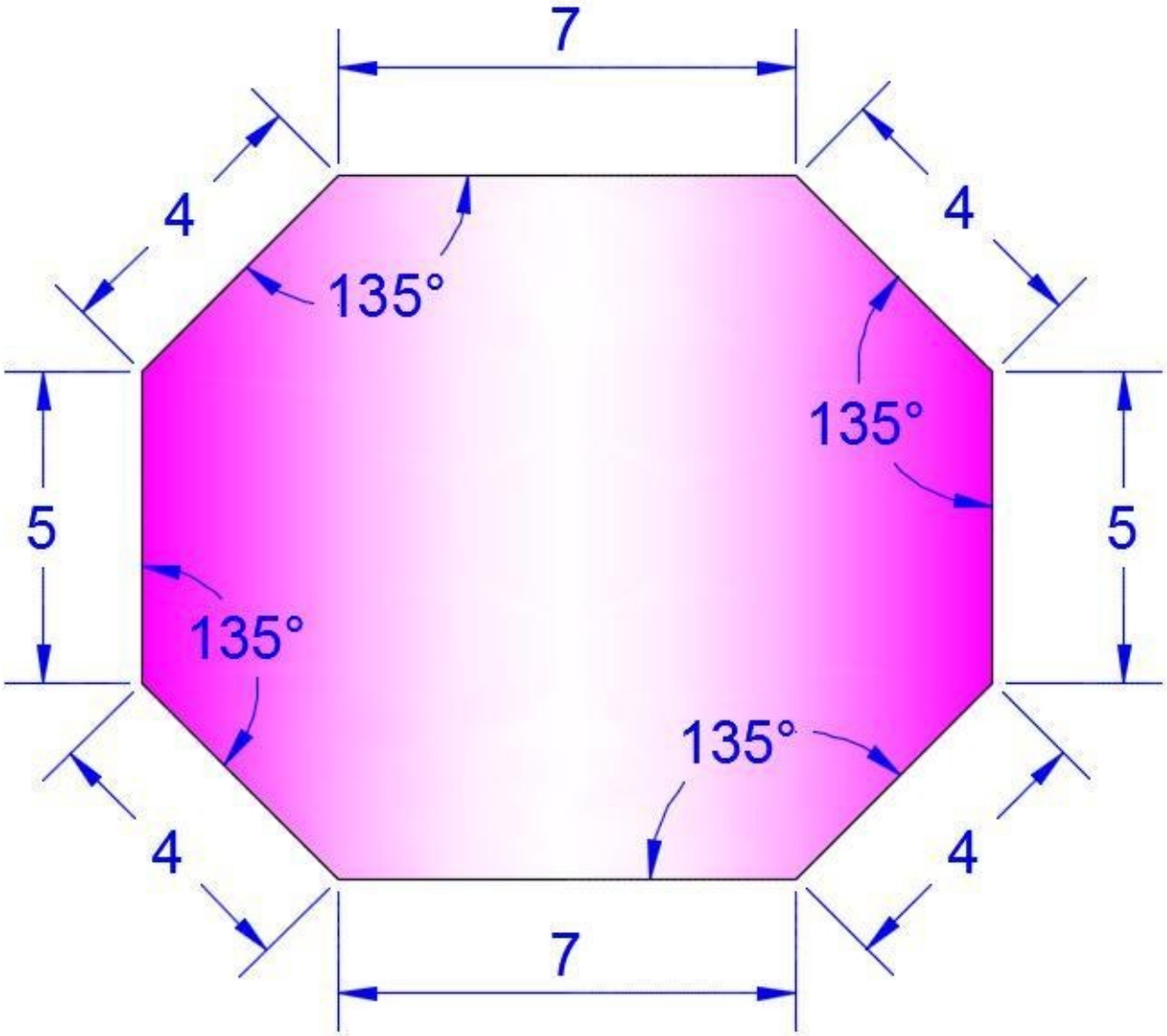
7
4
4
135°
135°
5
5
135°
135°
4
4
7

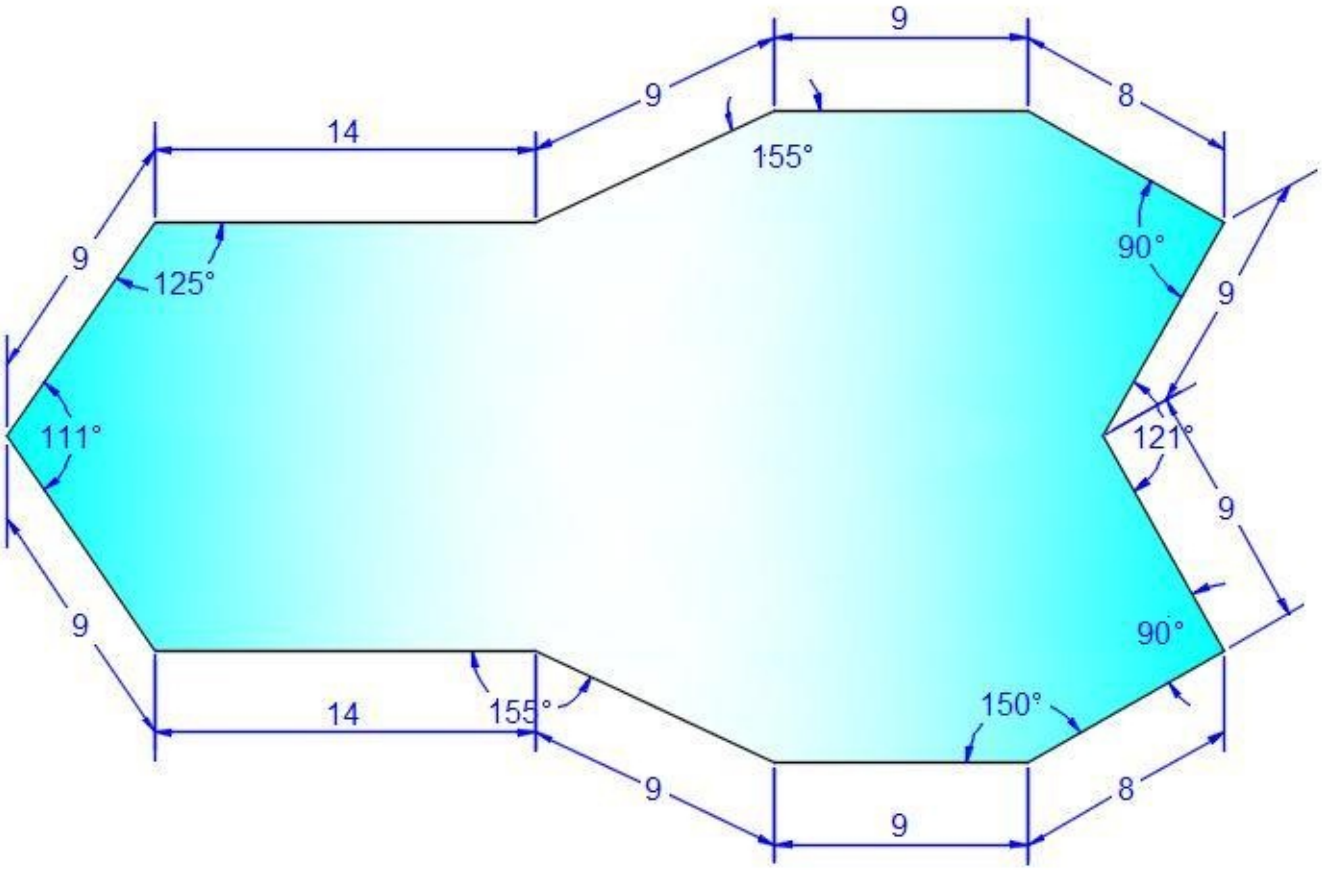
9
9
8
14
155°
9
125°
90°
9
111°
121°
9
9
90°
14
155°
150°
9
8
9

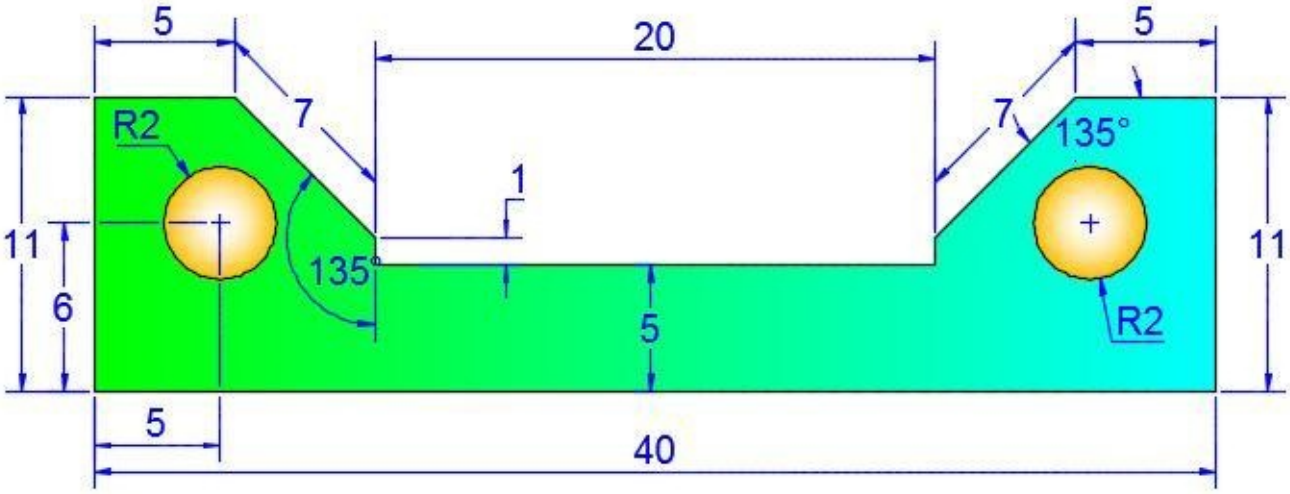
5
20
5
7
7
R2
135°
1
11
6
135°
5
11
R2
5
40

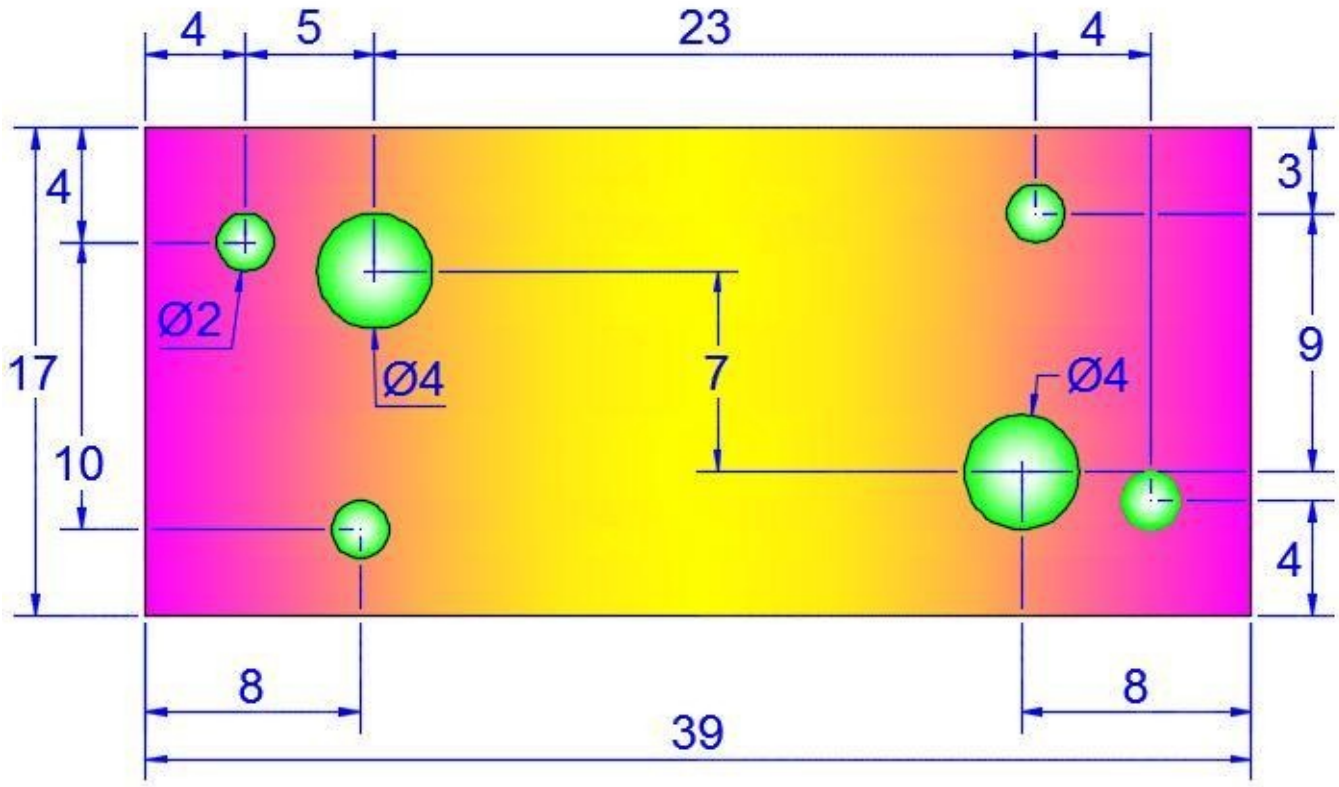
4
5
23
4
4
17
10
3
9
4
Ø2
Ø4
7
Ø4
8
8
39

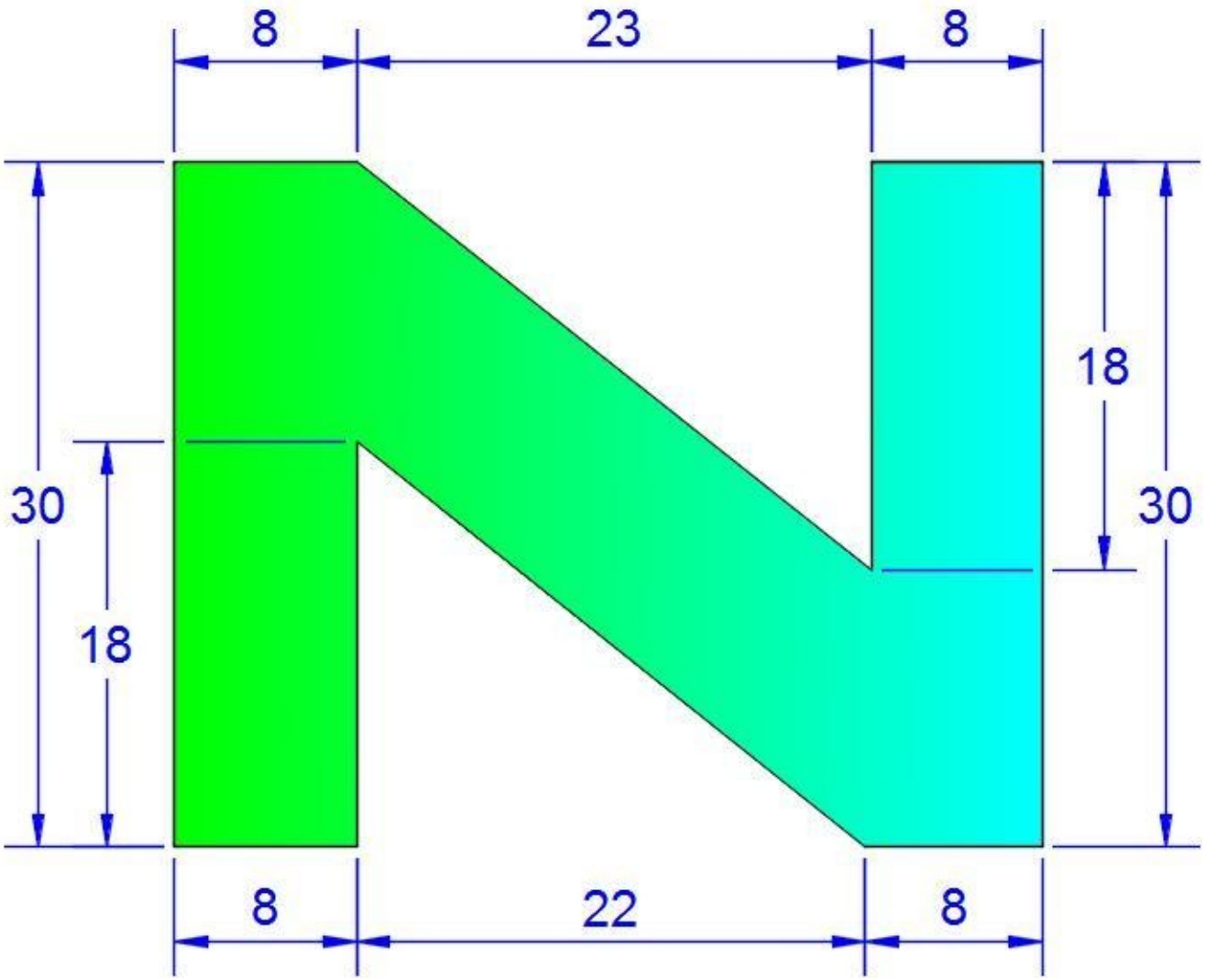
8
23
8
30
18
18
30
8
22
8

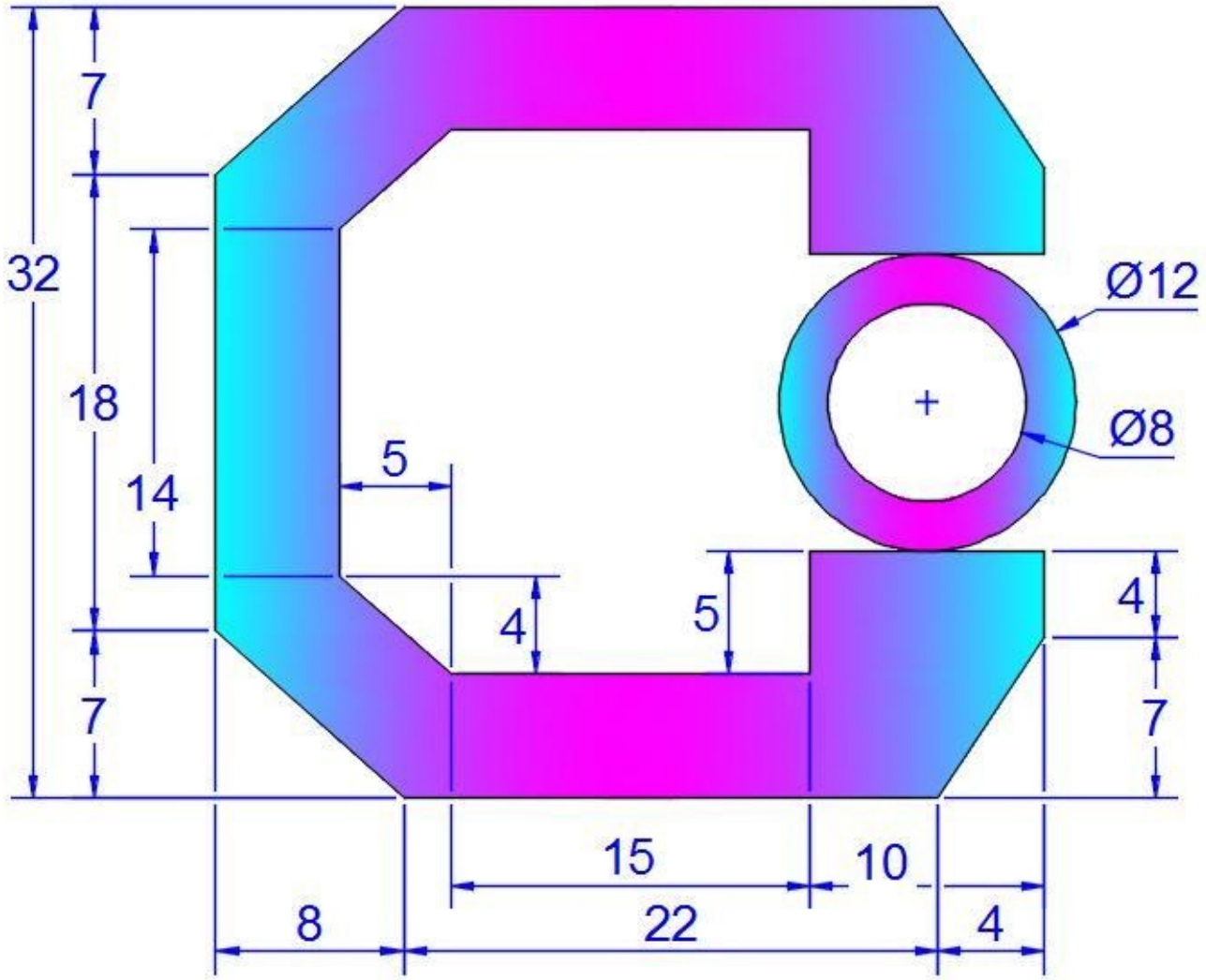
7
32
18
14
5
4
5
4
7
7
Ø12
Ø8
15
10
8
22
4

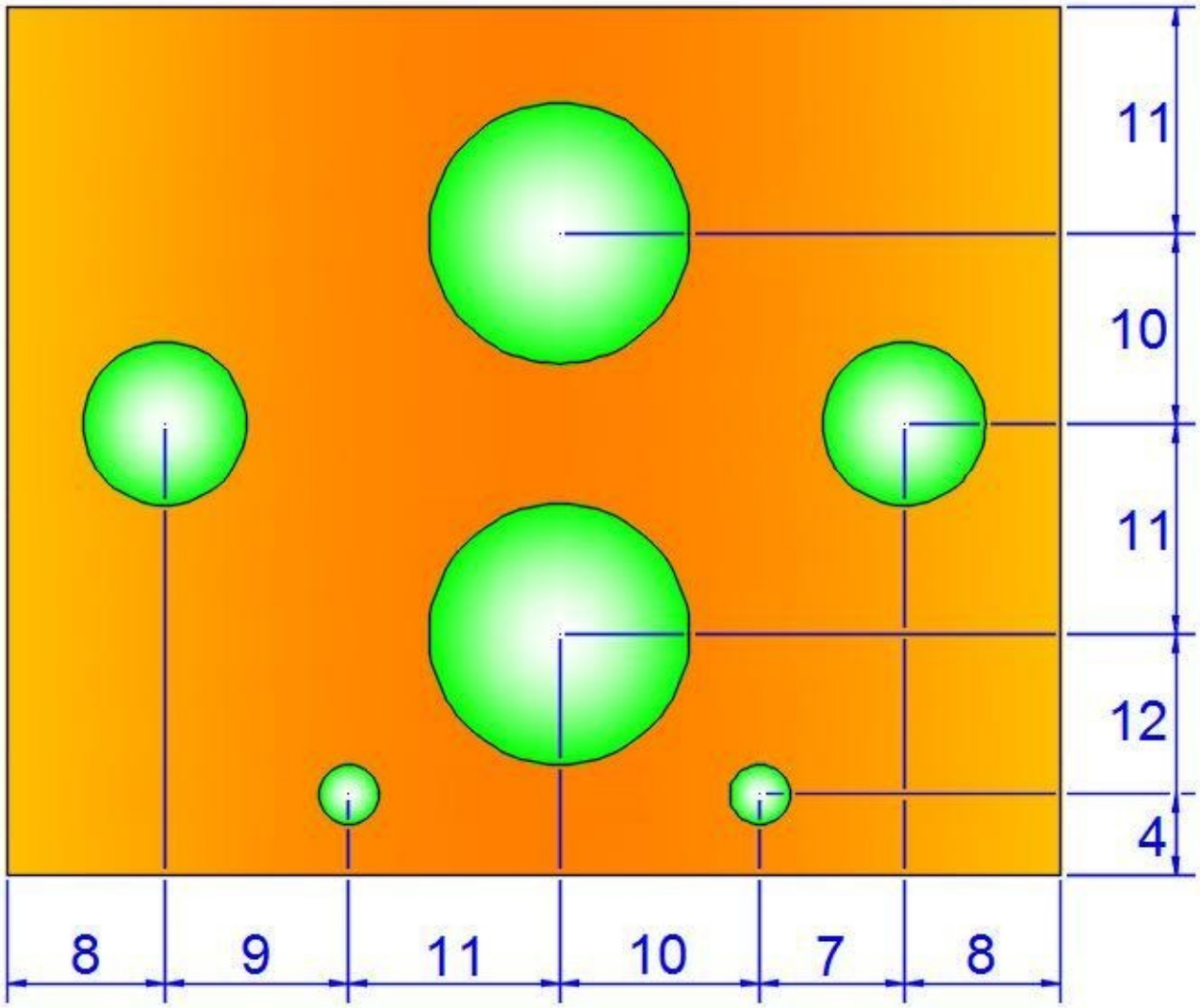

3D EXERCISES

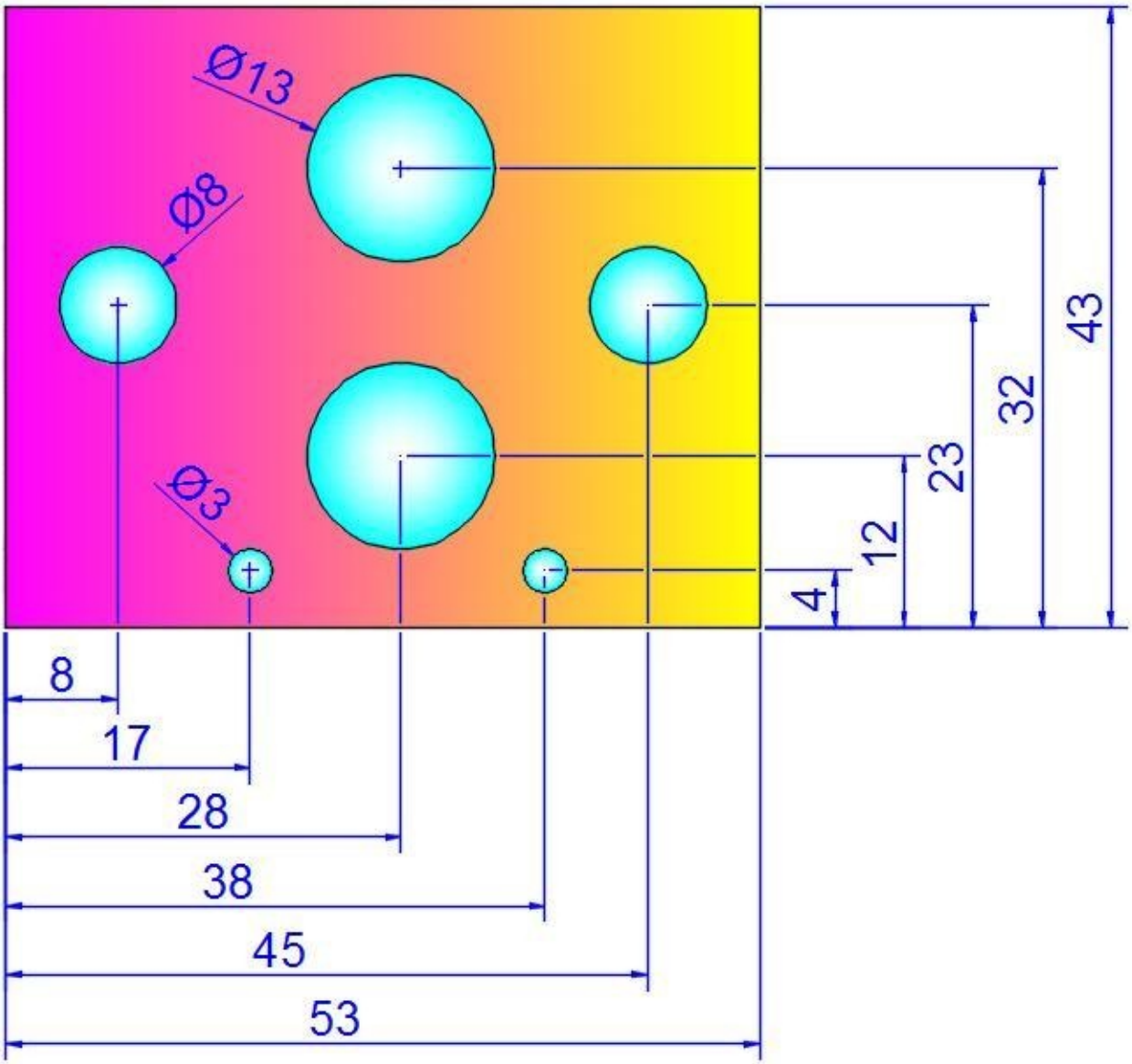
Ø13
Ø8
Ø3
43
32
23
12
4
8
17
28
38
45
53

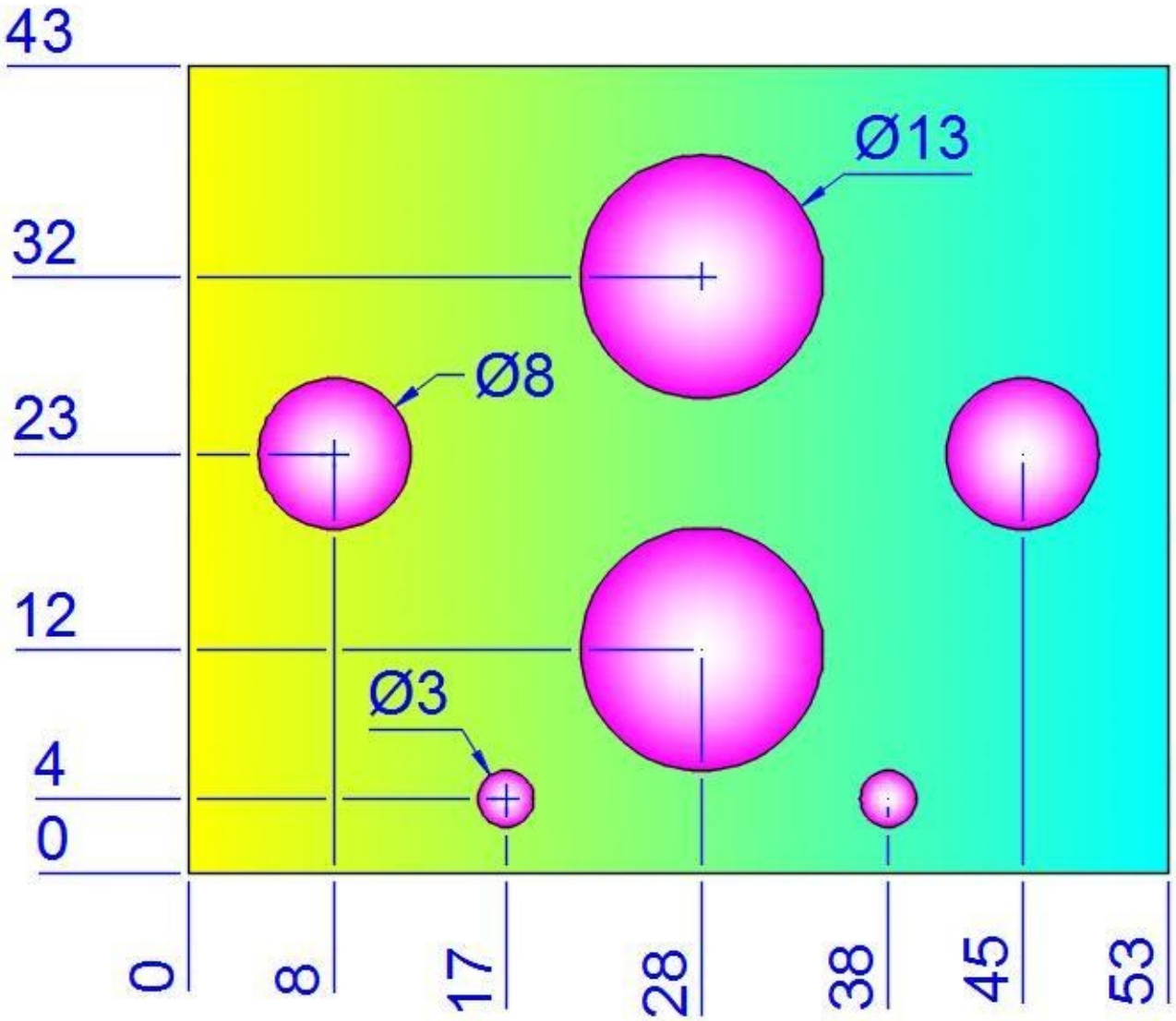
43
32
23
12
4
0
Ø13
Ø8
Ø3
0
8
17
28
38
45
53

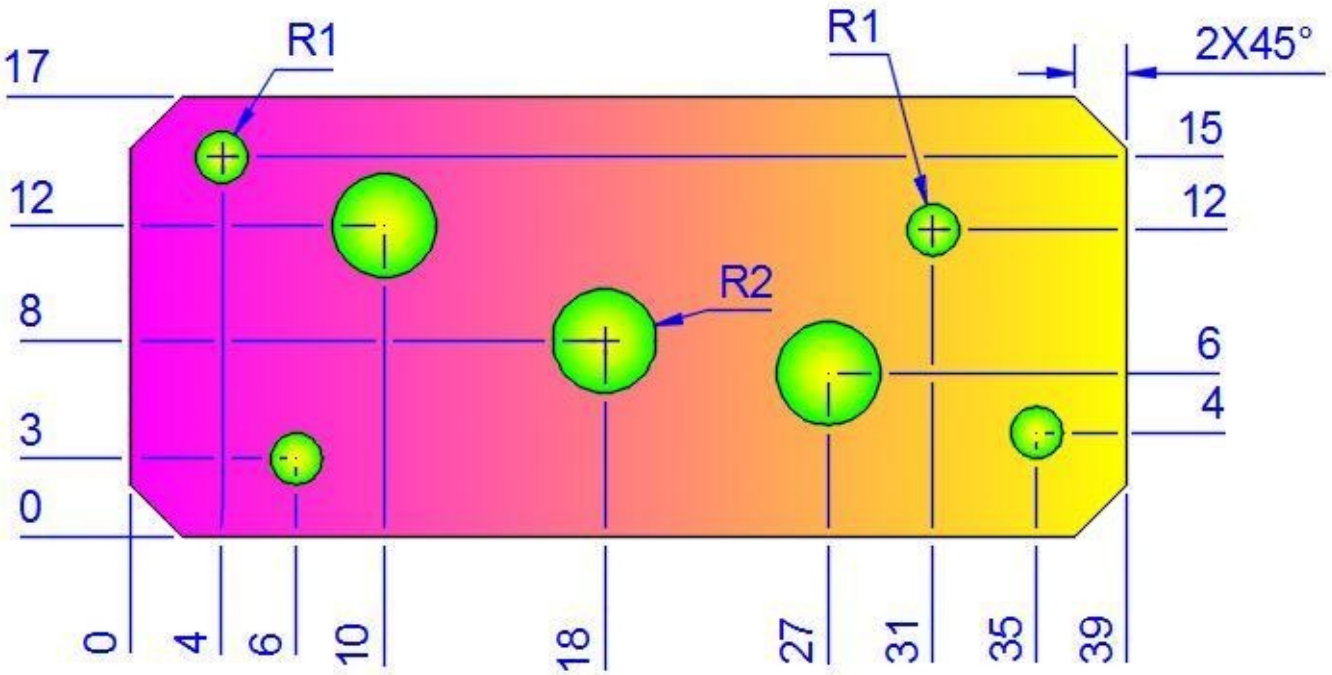
R1
R1
2X45°
R2
17
12
8
3
0
15
12
6
4
0
4
6
10
18
27
31
35
39

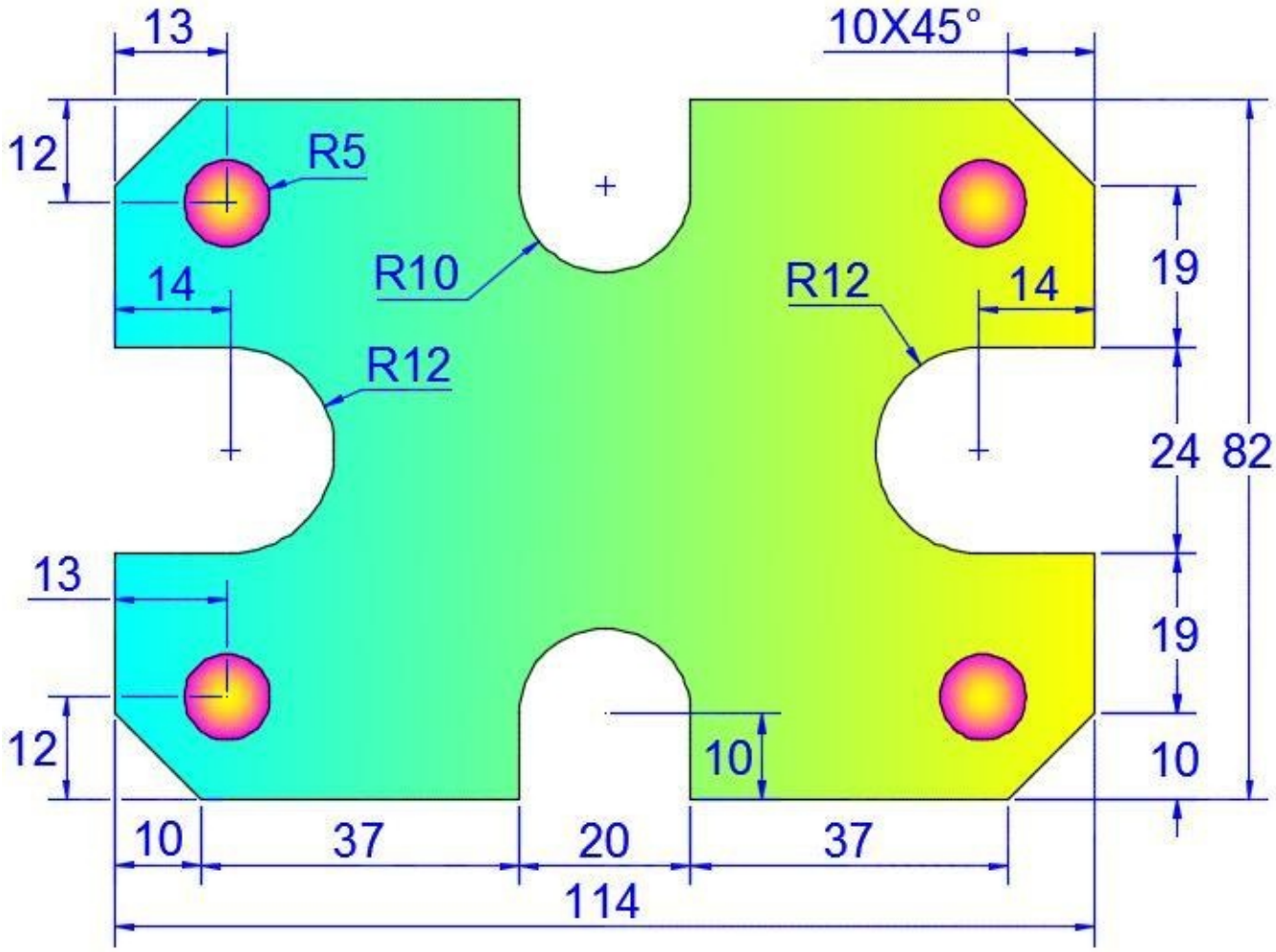
13
10X45°
12
R5
14
R10
R12
R12
14
19
24
82
13
19
12
10
10
10
37
20
37
114

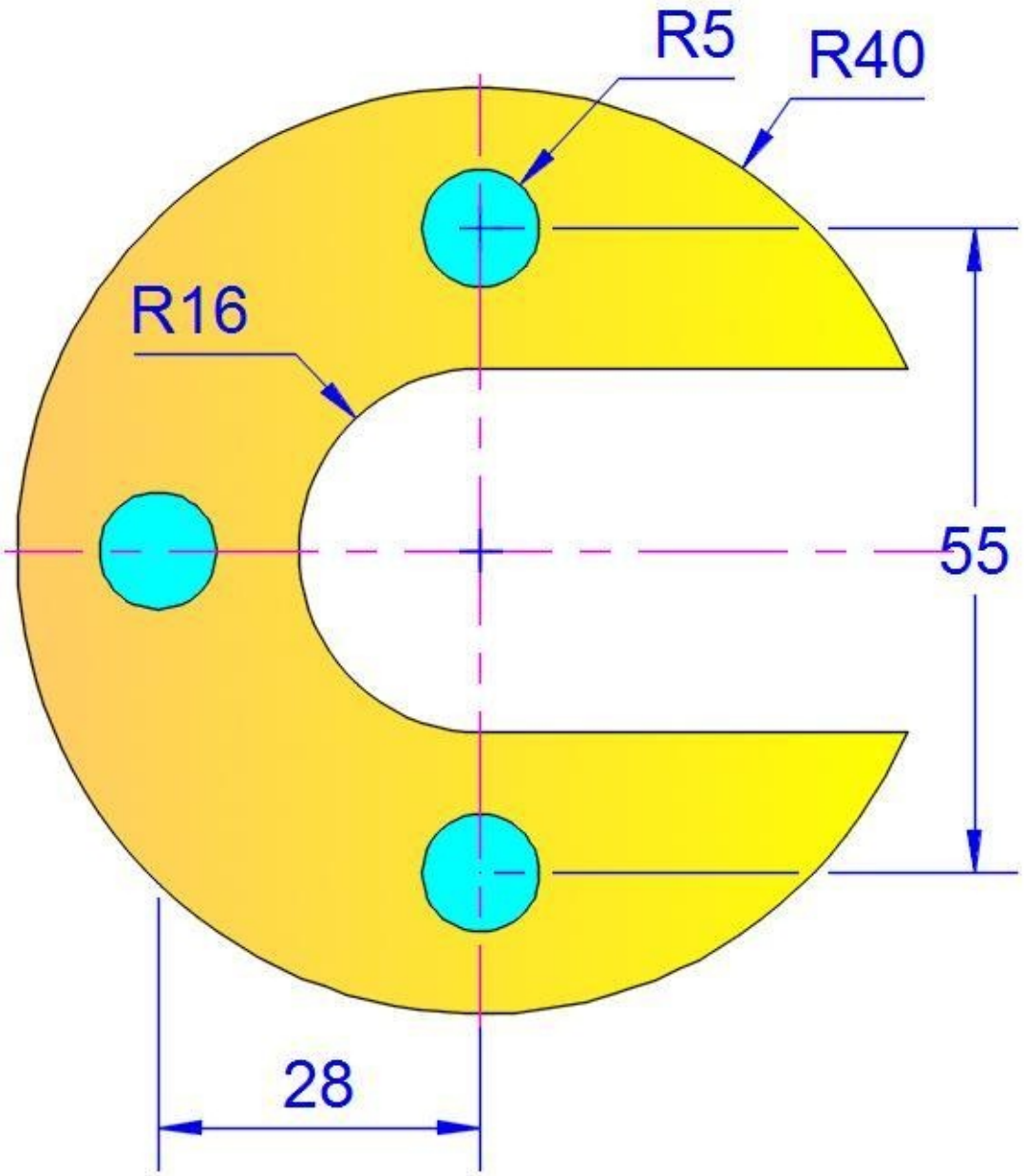
R5
R40
R16
55
28

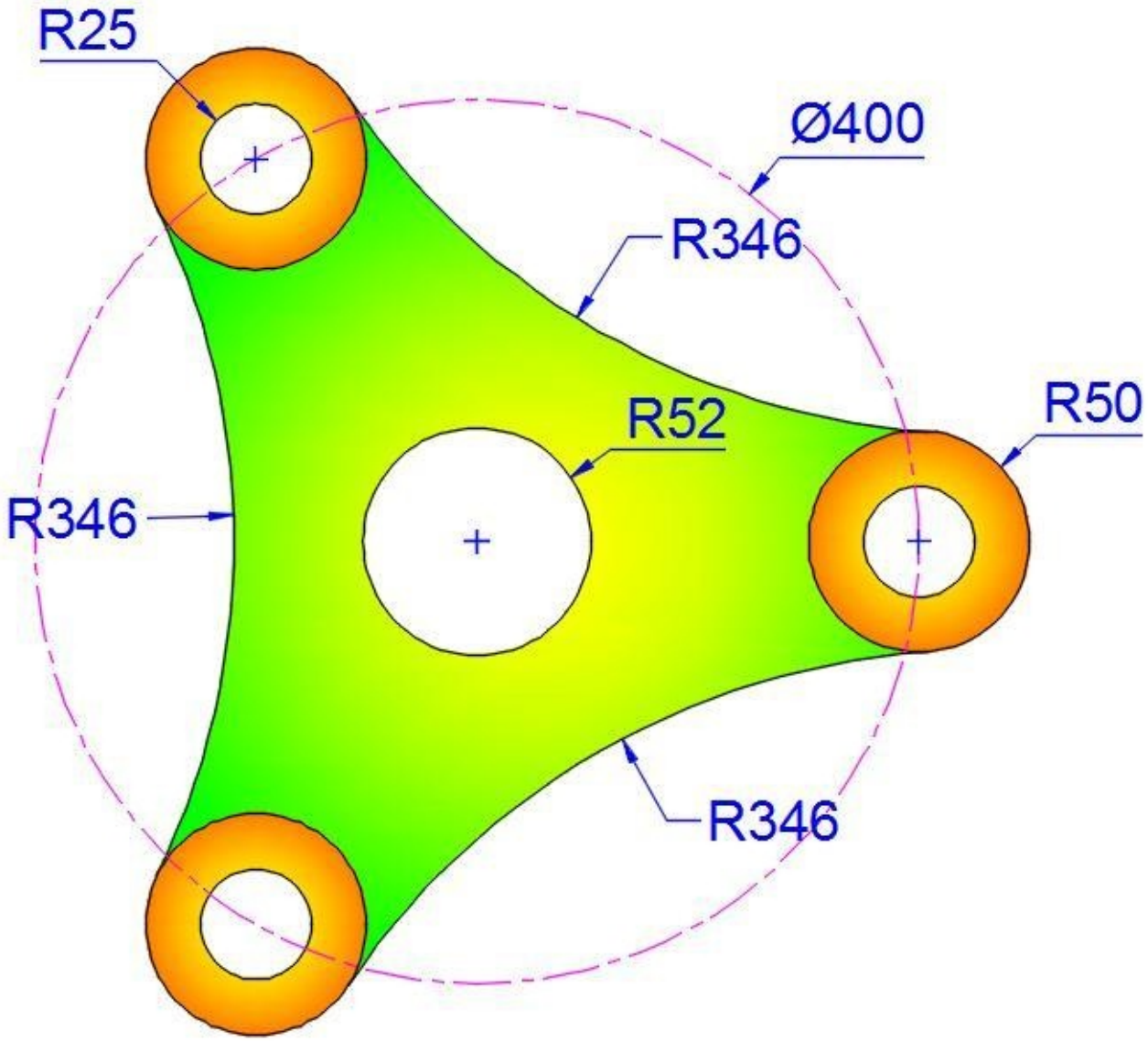
R25
Ø400
R346
R50
R52
R346
R346

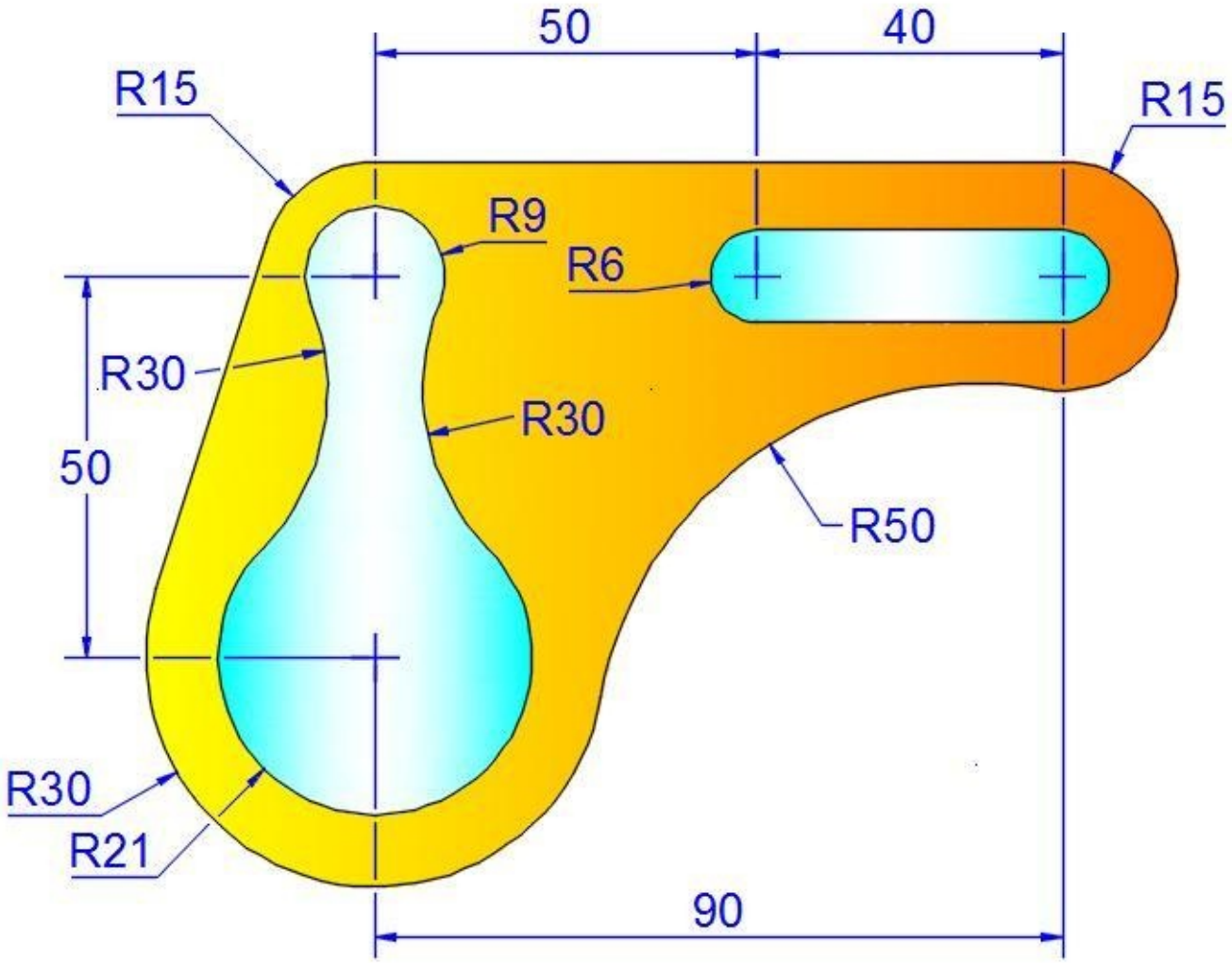
50
40
R15
R15
R9
R6
R30
R30
50
R50
R30
R21
90

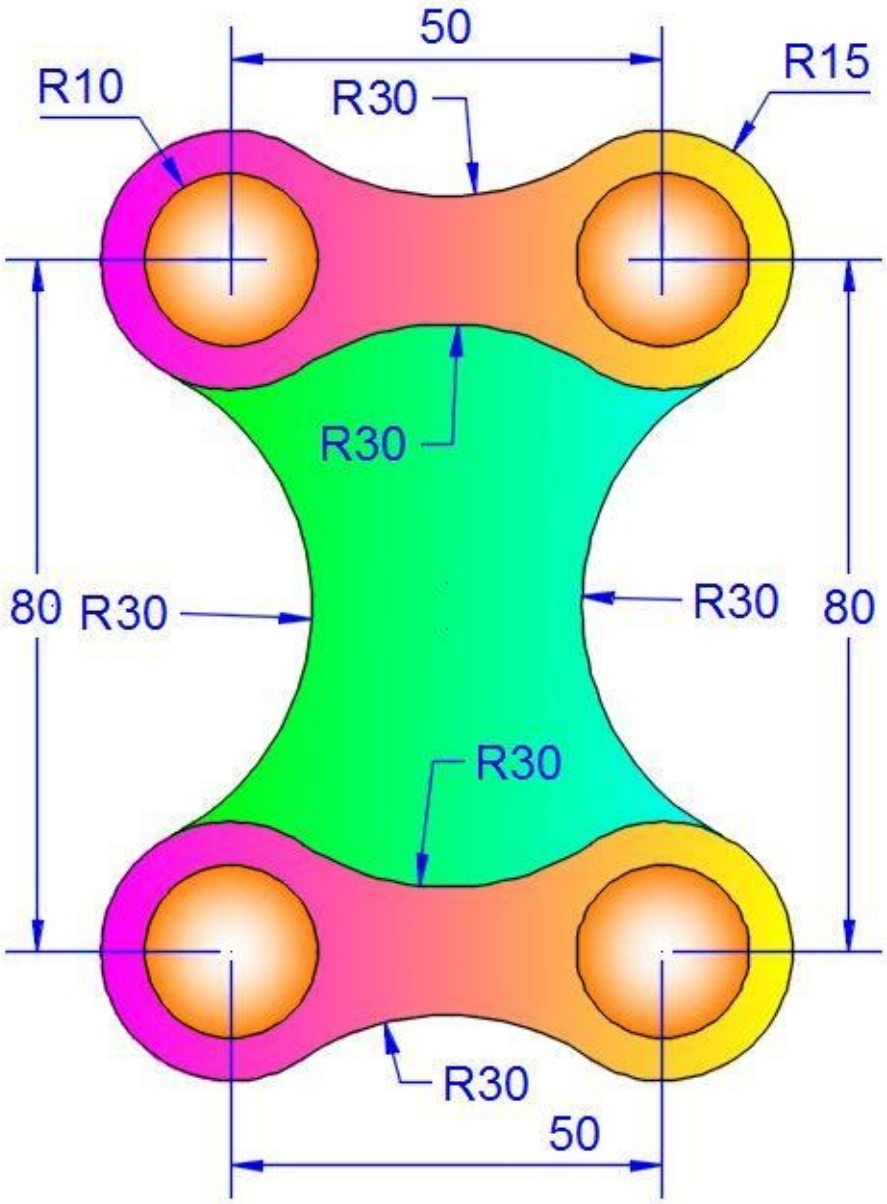
50
R10
R30
R15
R30
80
R30
R30
80
R30
R30
50

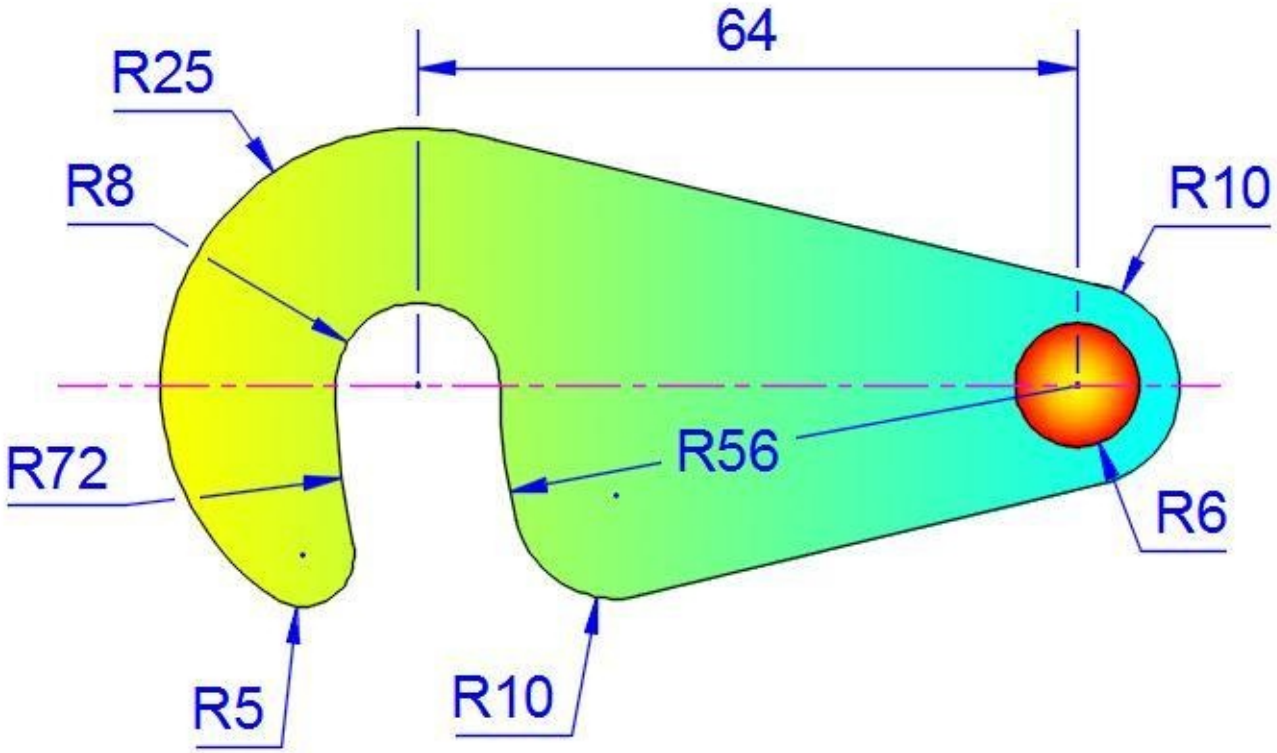
64
R25
R8
R10
R72
R56
R6
R5
R10

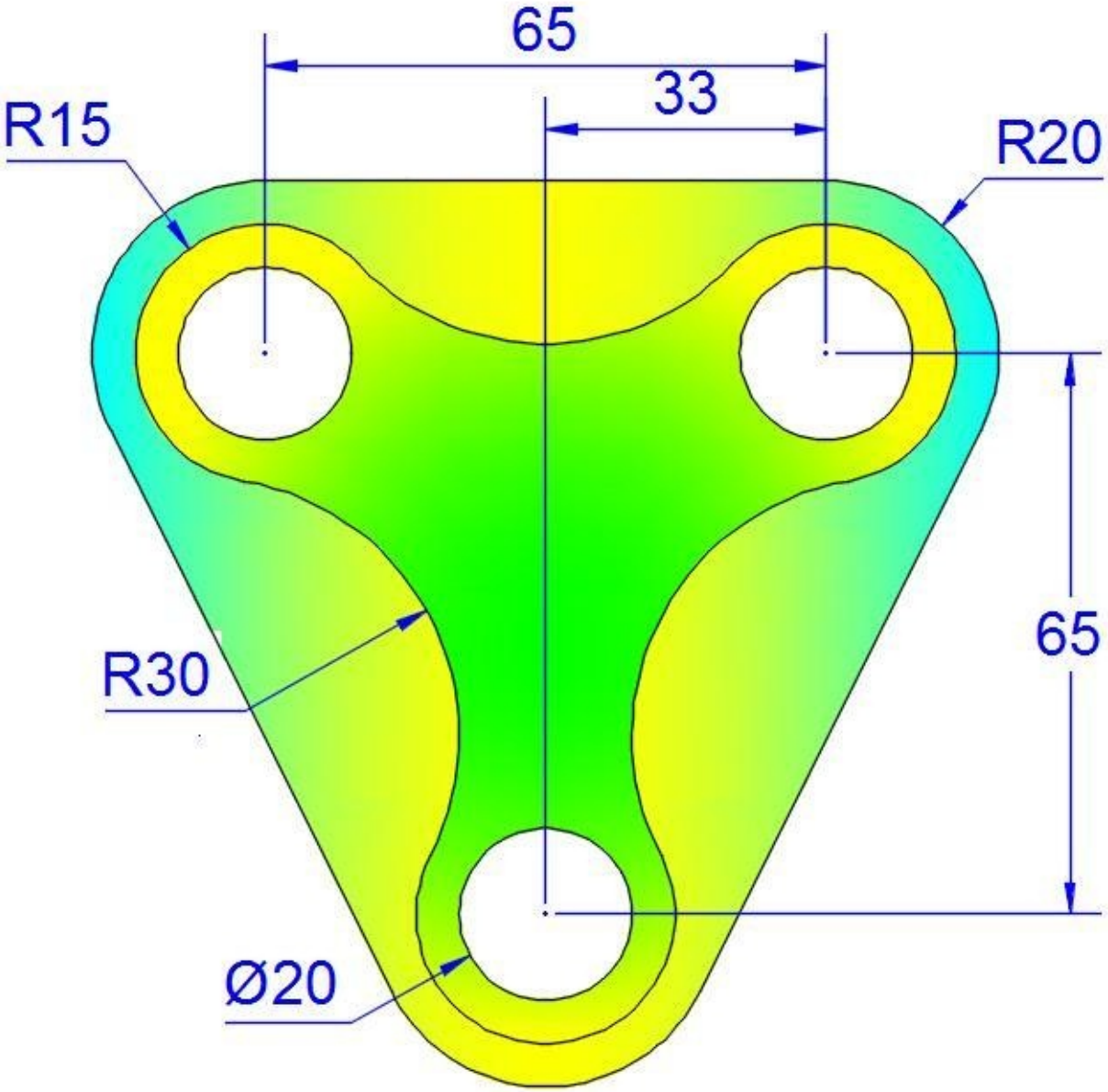
65
33
R15
R20
65
R30
Ø20

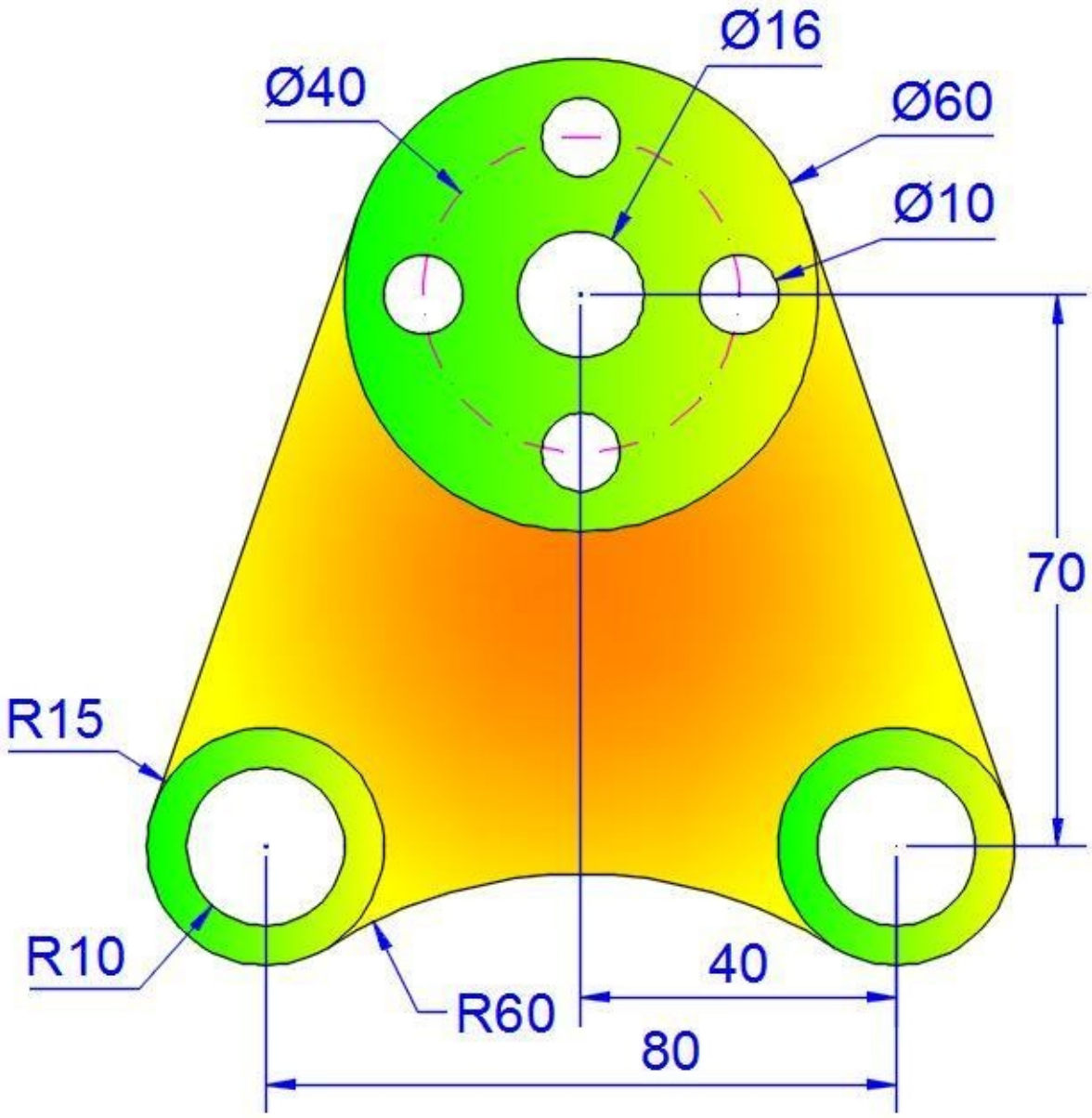
Ø16
Ø40
Ø60
Ø10
70
R15
R10
R60
40
80

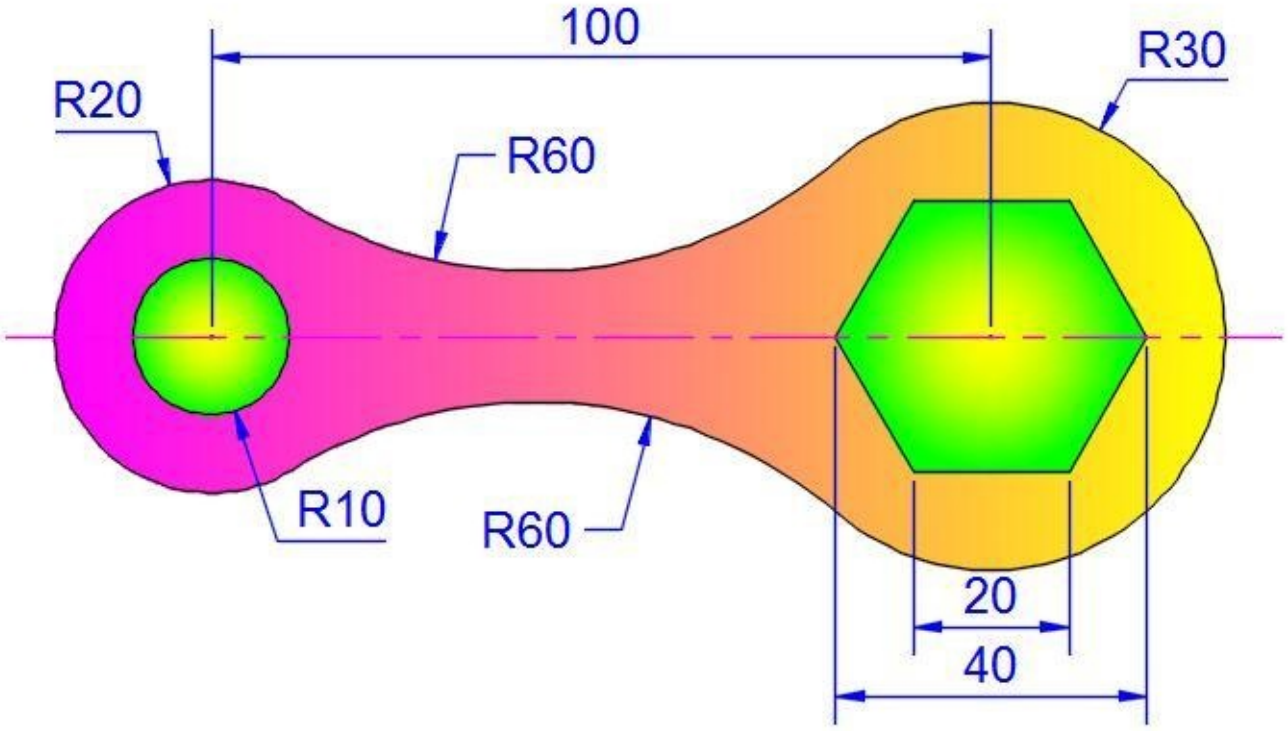
100
R20
R60
R30
R10
R60
20
40

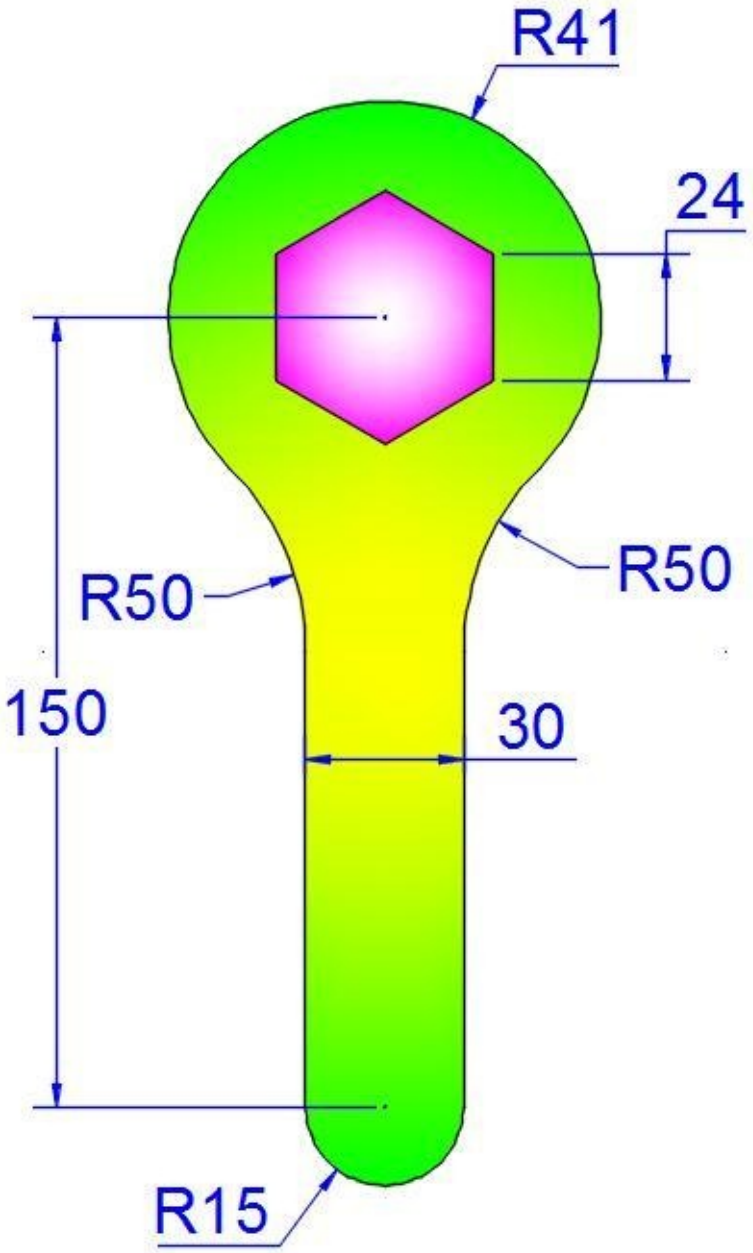
R41
24
R50
R50
150
30
R15

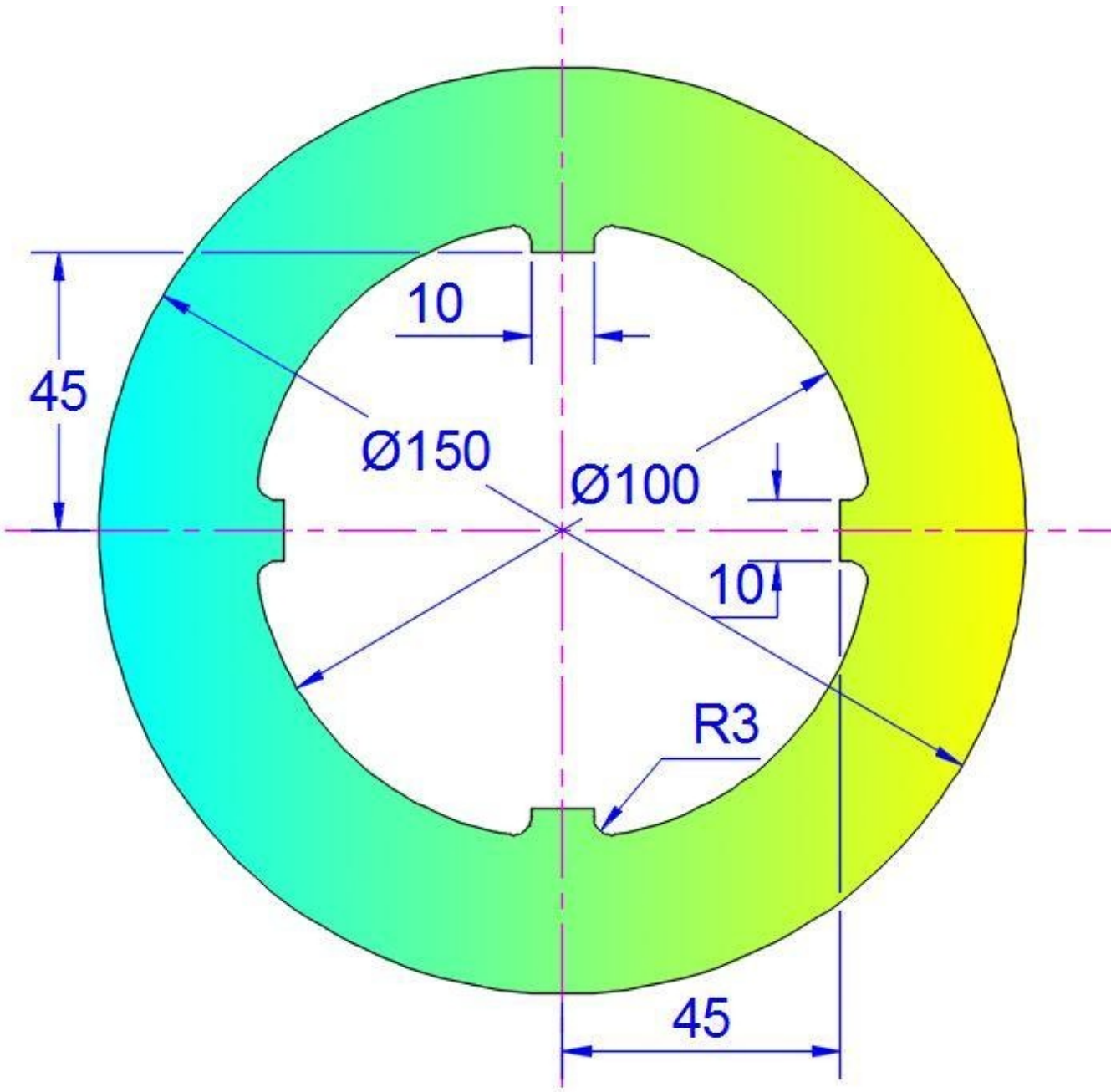
10
45
Ø150
Ø100
10
R3
45

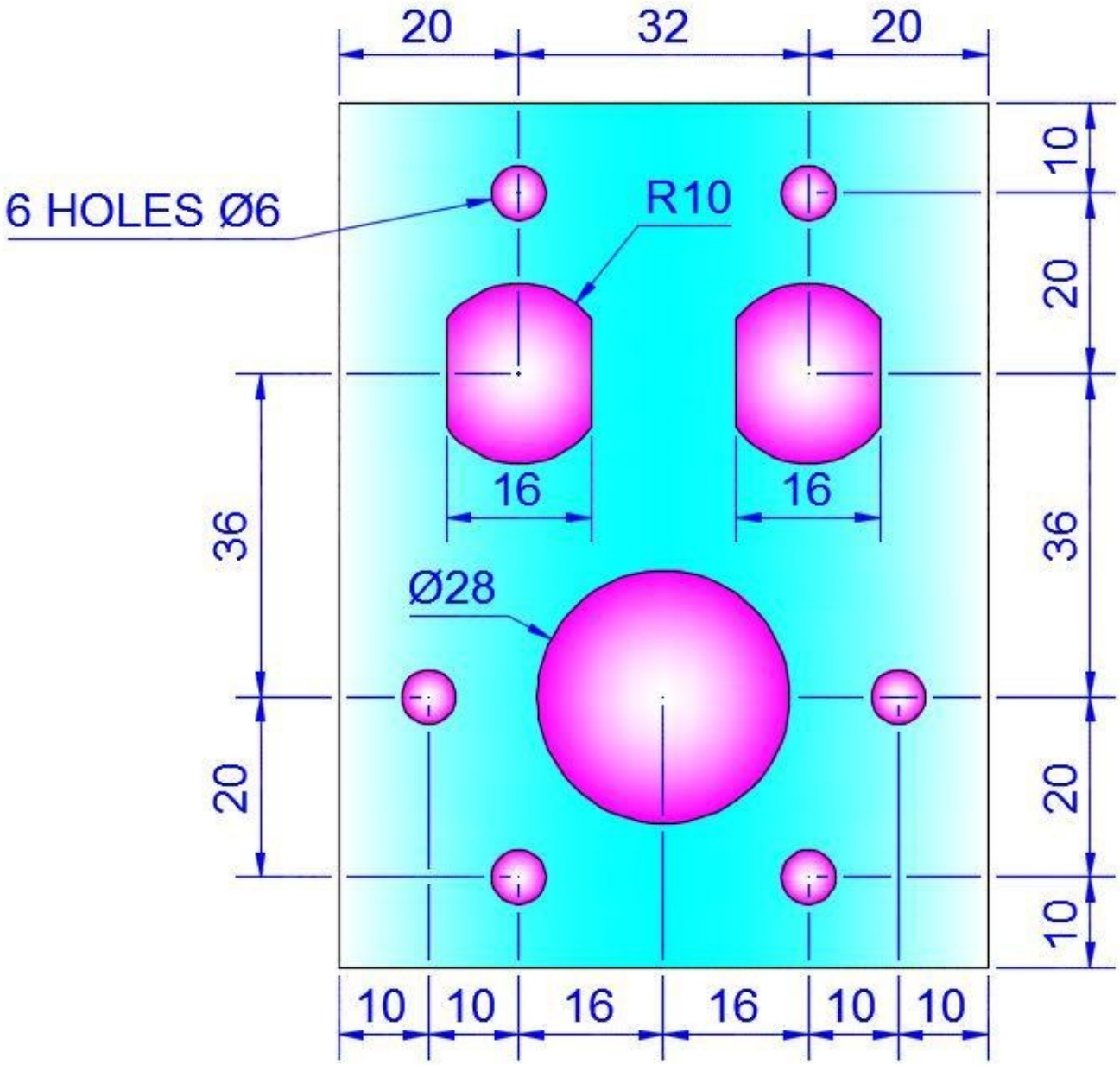
20
32
20
10
6 HOLES Ø6
R10
20
16
16
36
36
Ø28
20
20
10
10
10
16
16
10
10

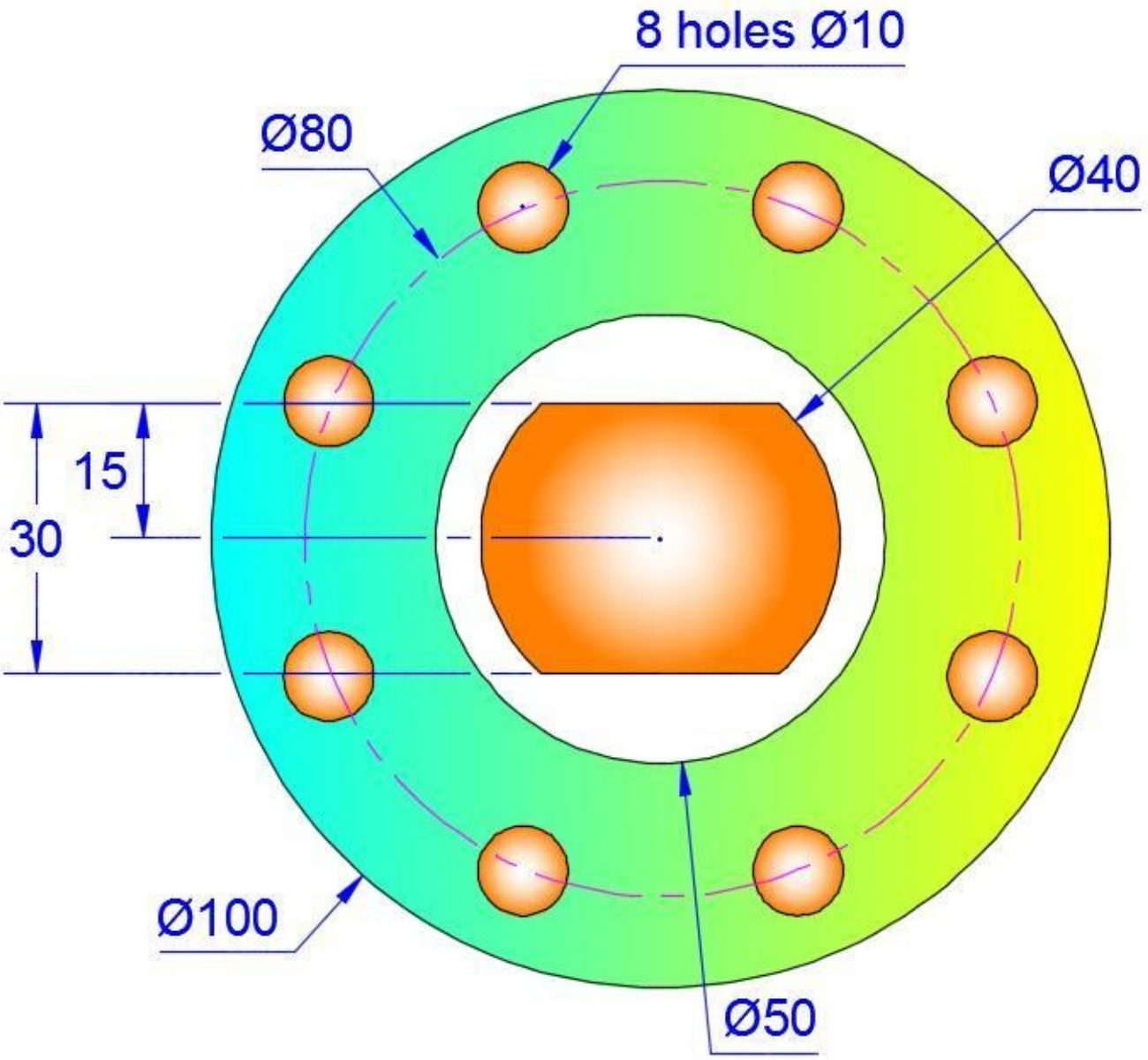

Thank You

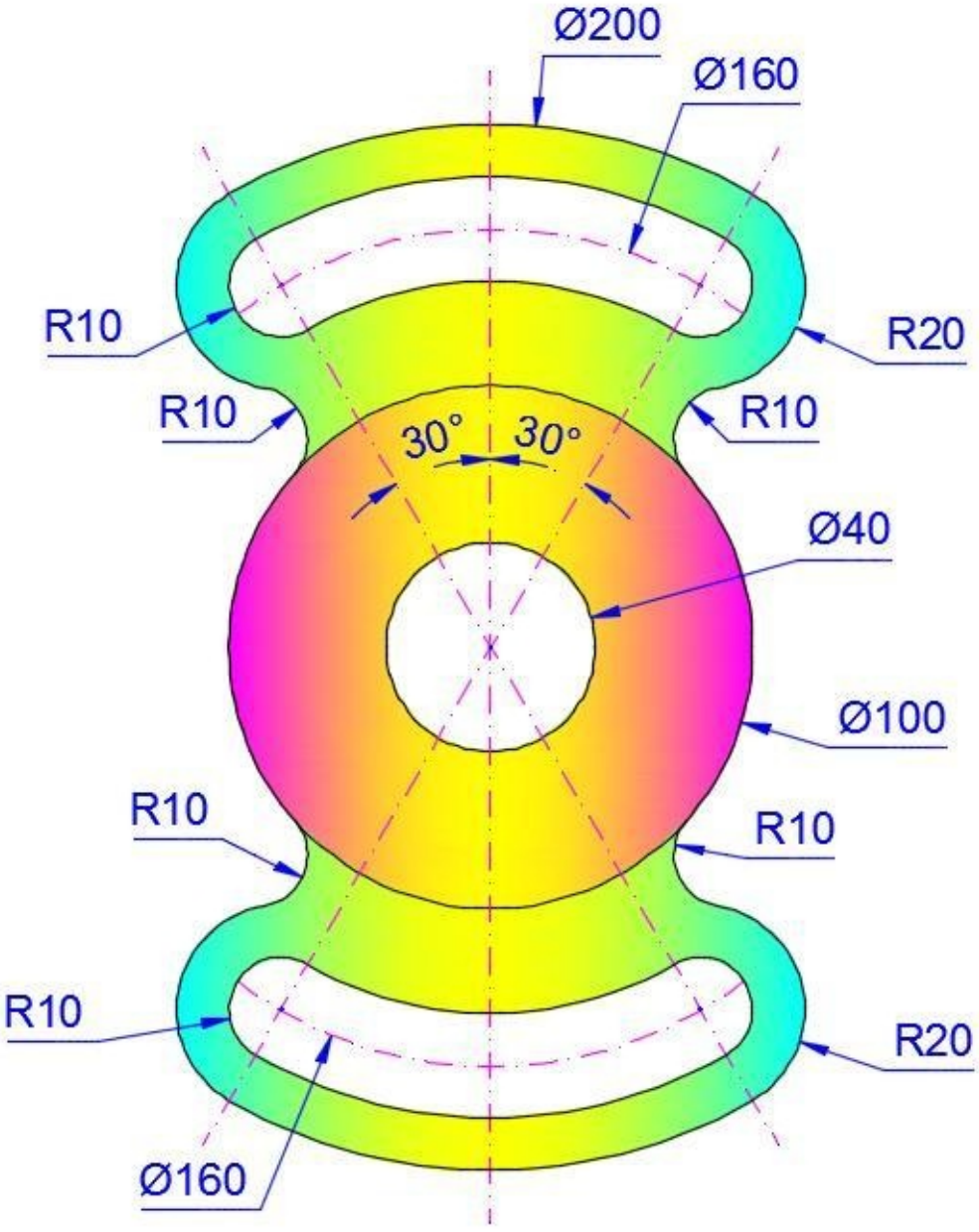
Ø200
Ø160
R10
R20
R10
R10
30°
30°
Ø40
Ø100
R10
R10
R10
R20
Ø160

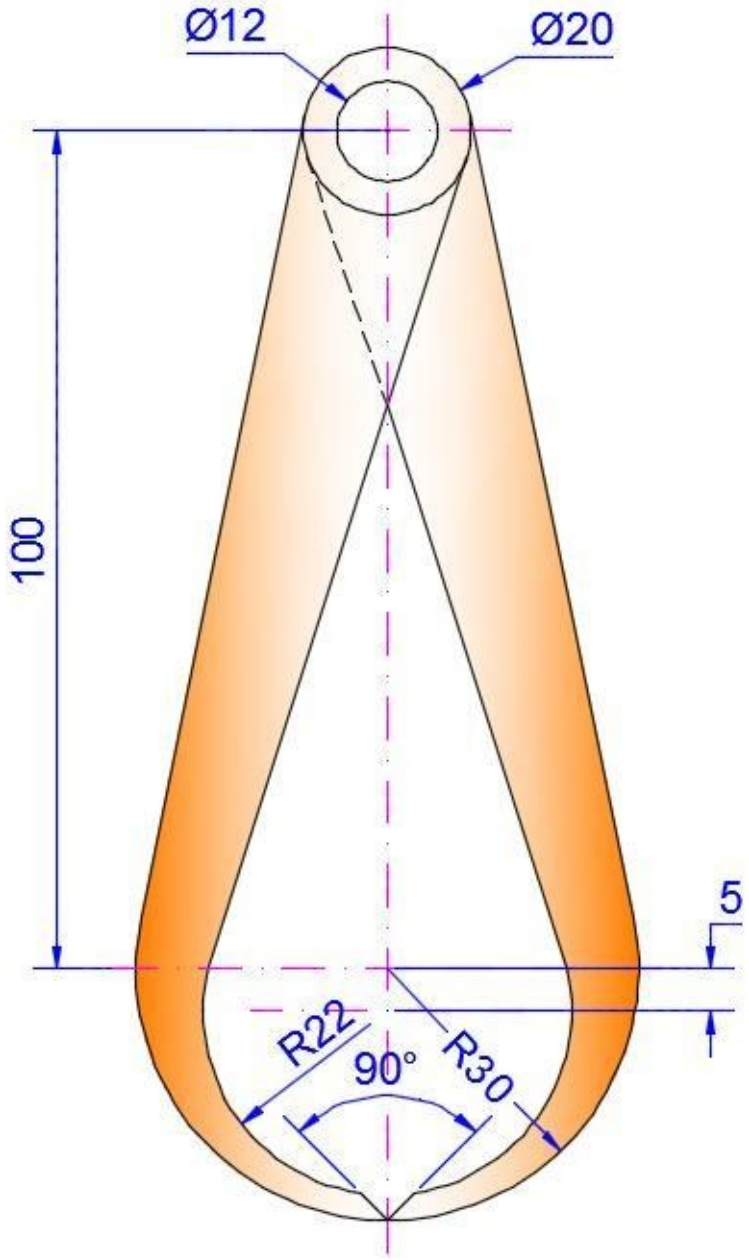
Ø12
Ø20
100
5
R22
90°
R30

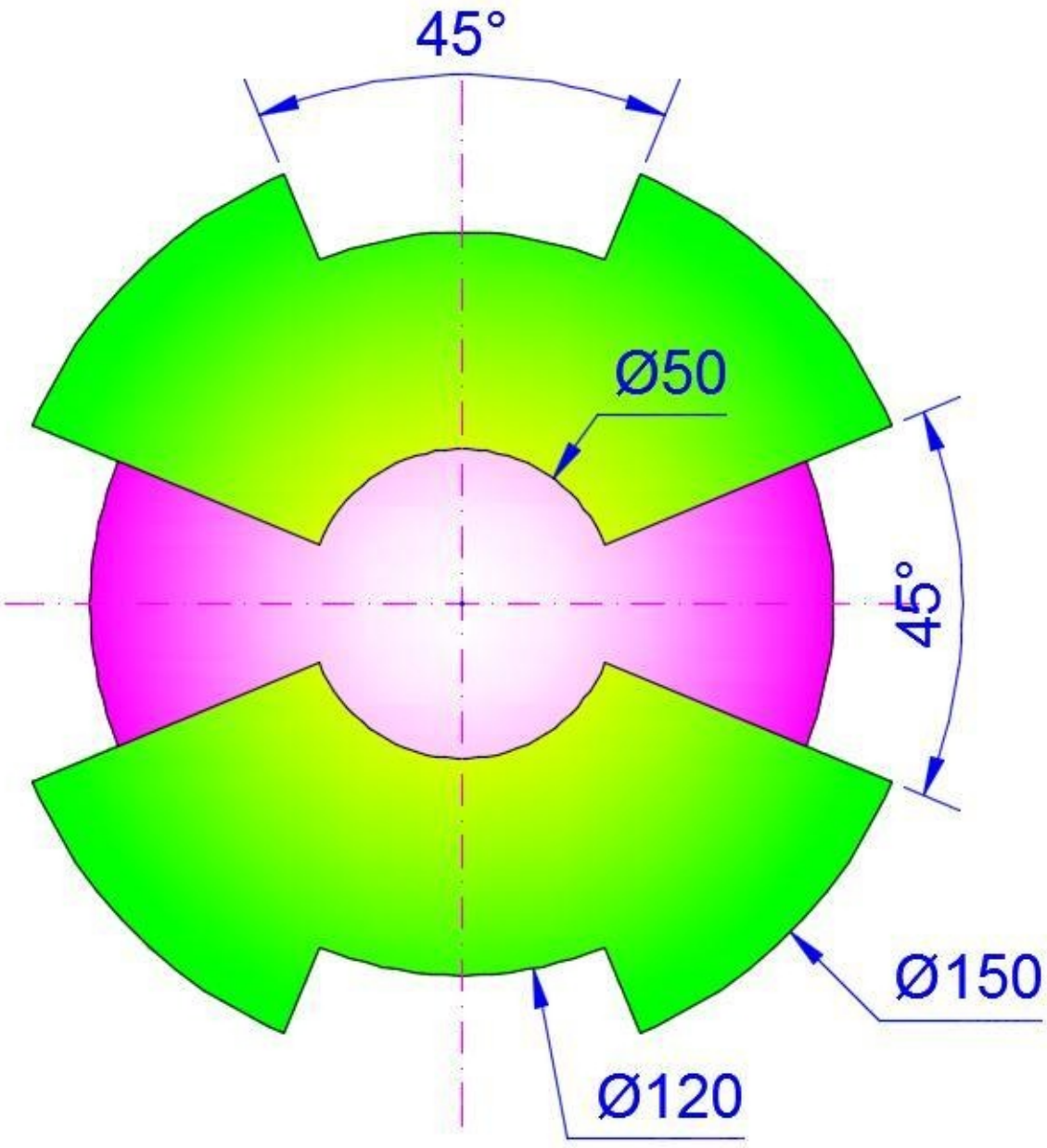
45°
Ø50
45°
Ø150
Ø120

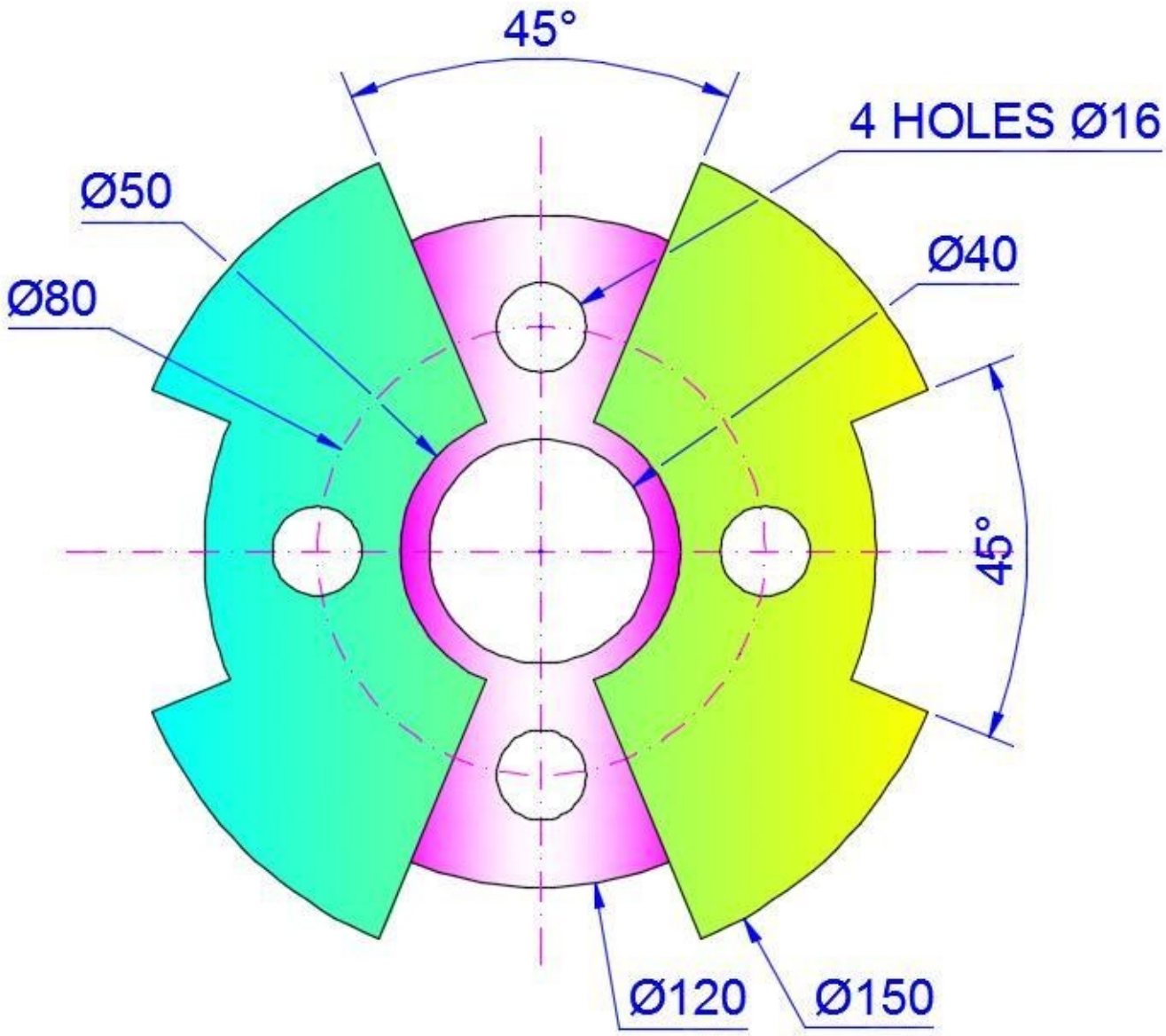
45°
4 HOLES Ø16
Ø50
Ø40
Ø80
45°
Ø120
Ø150

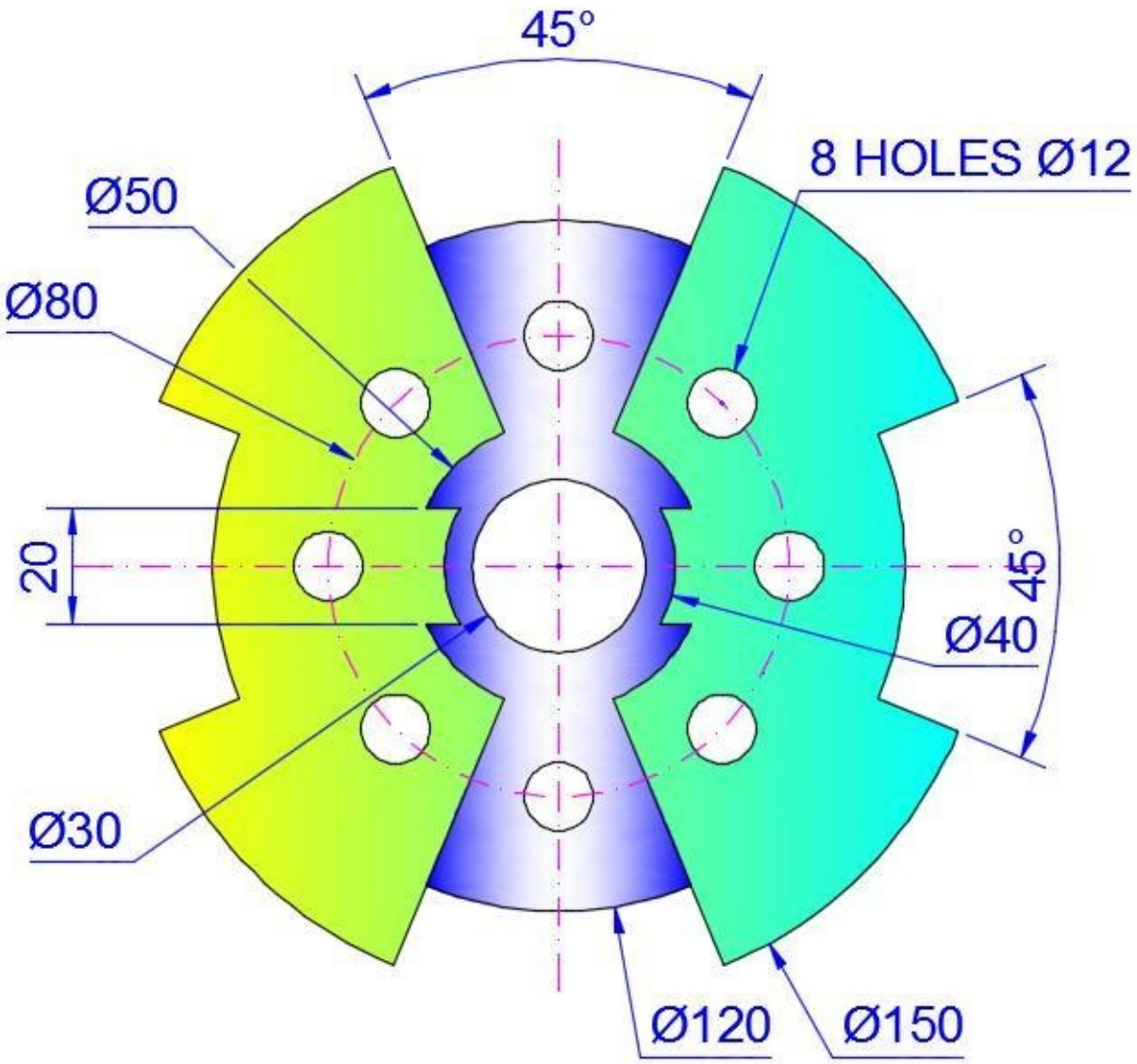
45°
8 HOLES Ø12
Ø50
Ø80
20
45°
Ø40
Ø30
Ø120
Ø150

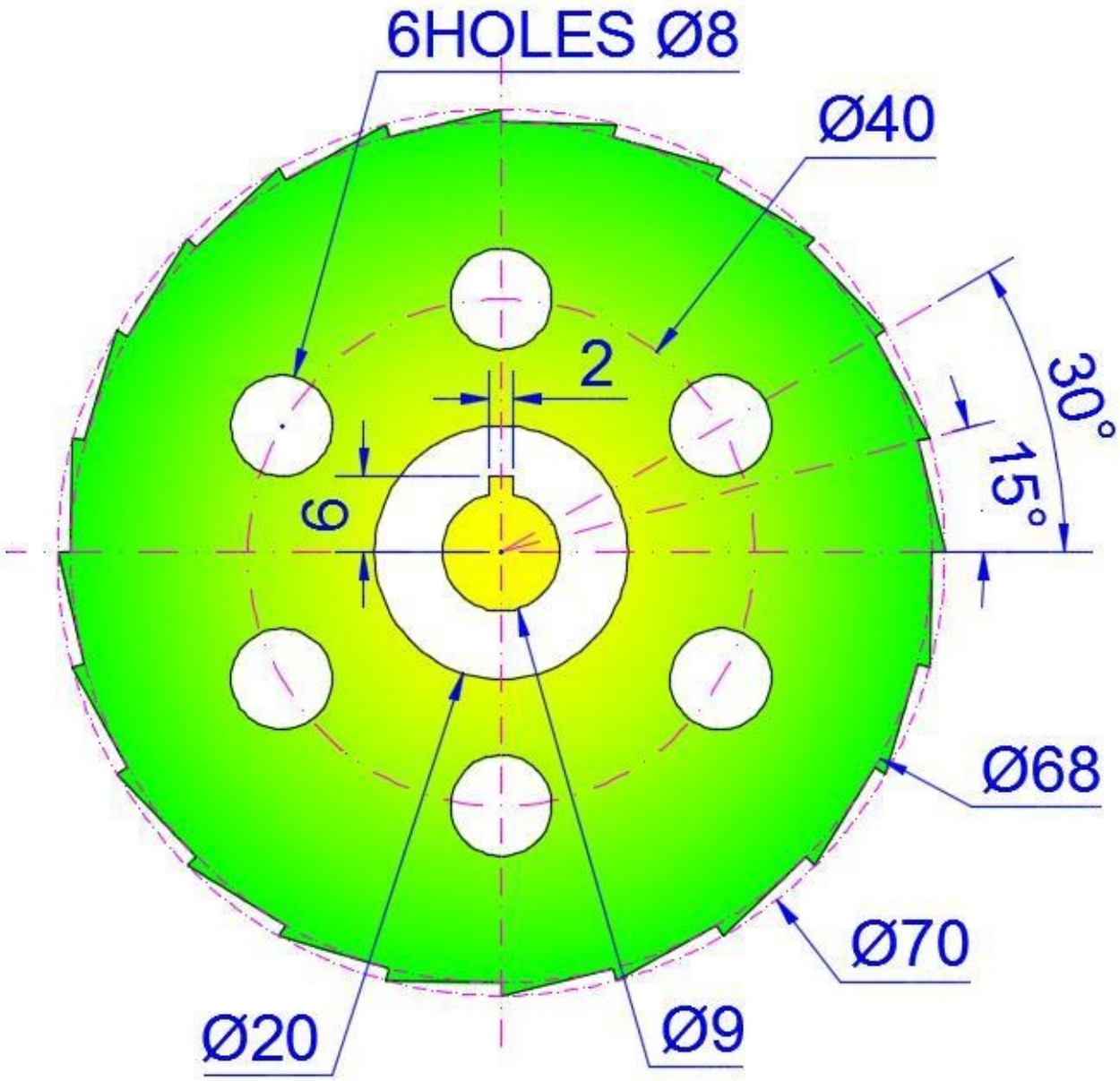
6HOLES Ø8
Ø40
2
30°
15°
9
Ø68
Ø70
Ø20
Ø9

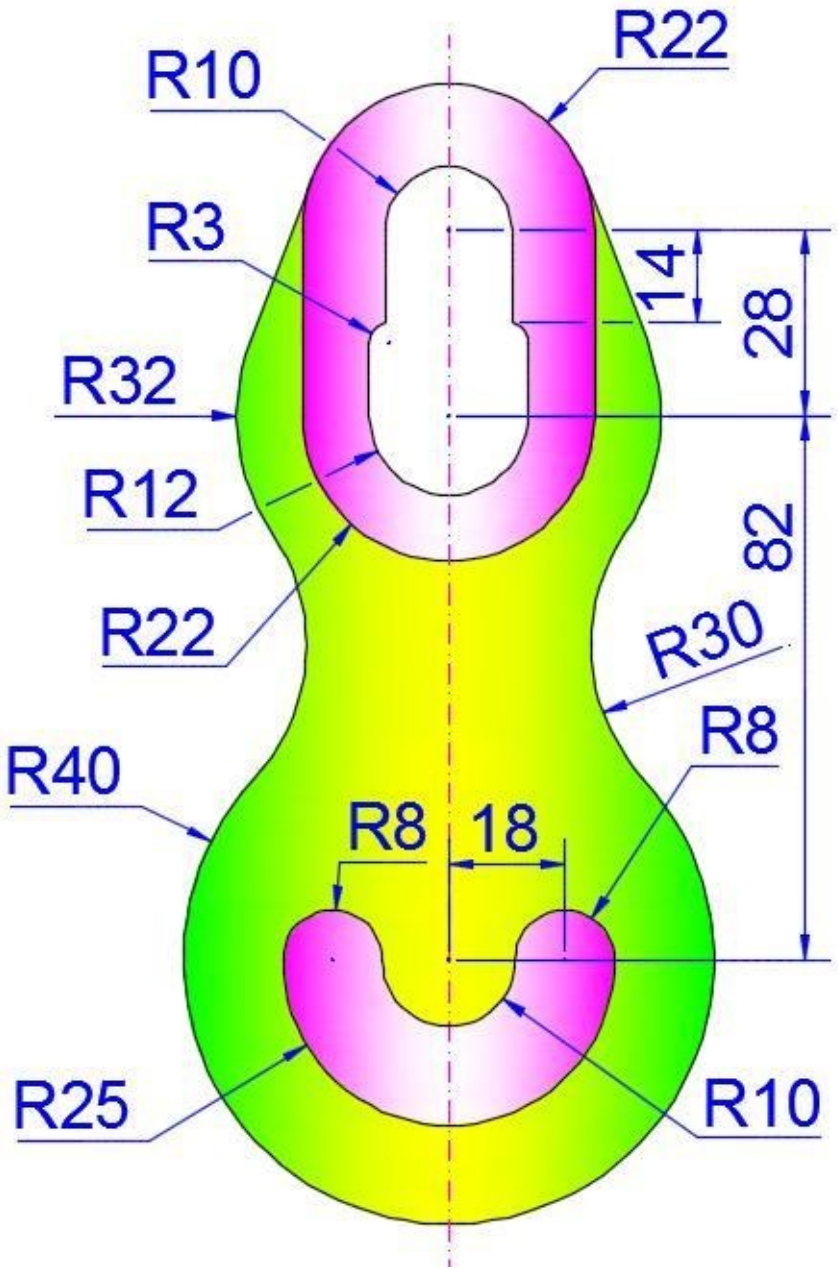
R22
R10
R3
14
28
R32
R12
82
R22
R30
R8
R40
R8
18
R25
R10

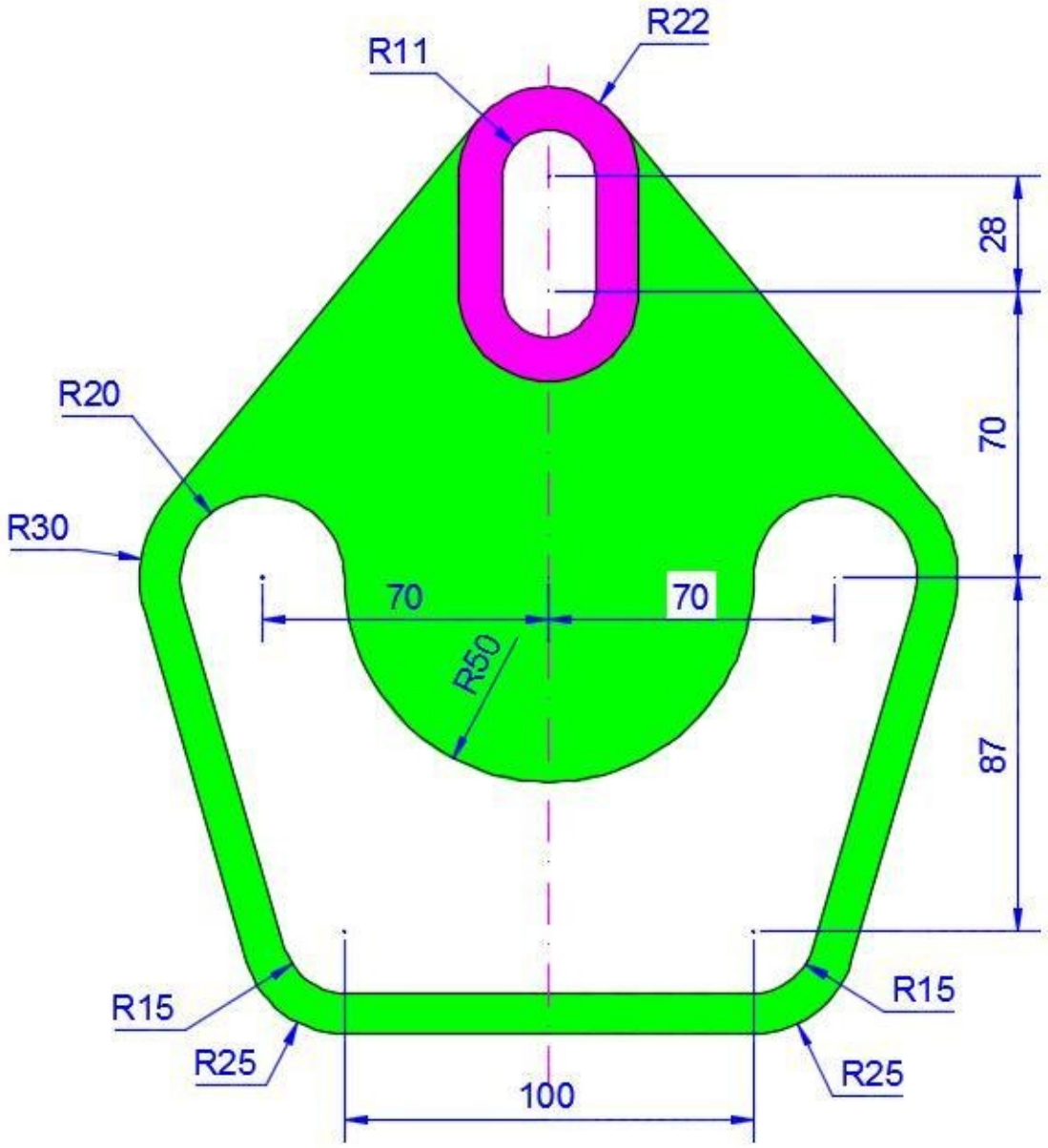
R11
R22
28
70
R20
R30
70
70
R50
87
R15
R15
R25
R25
100

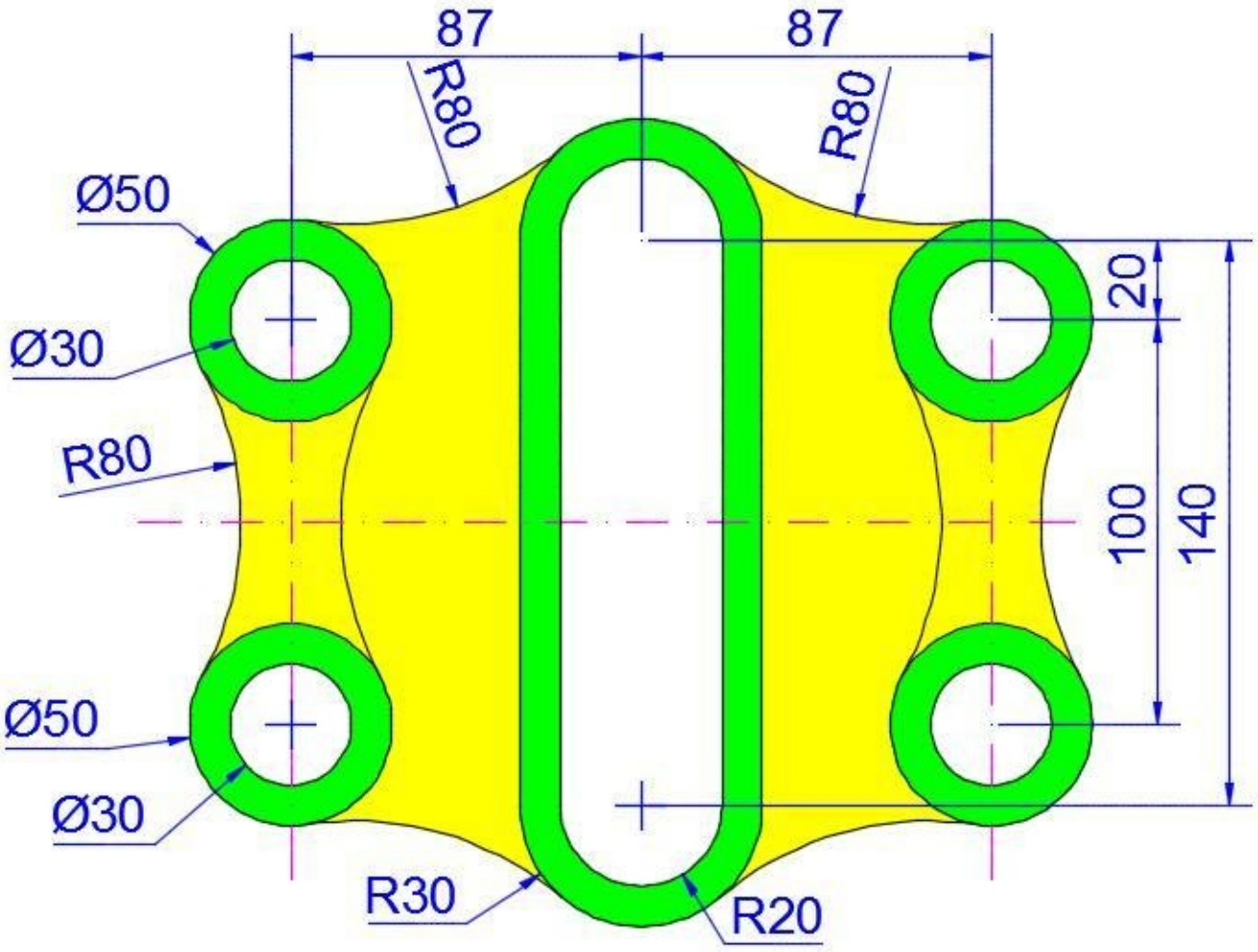
87
87
R80
R80
Ø50
Ø30
R80
Ø50
Ø30
R30
R20
20
100
140

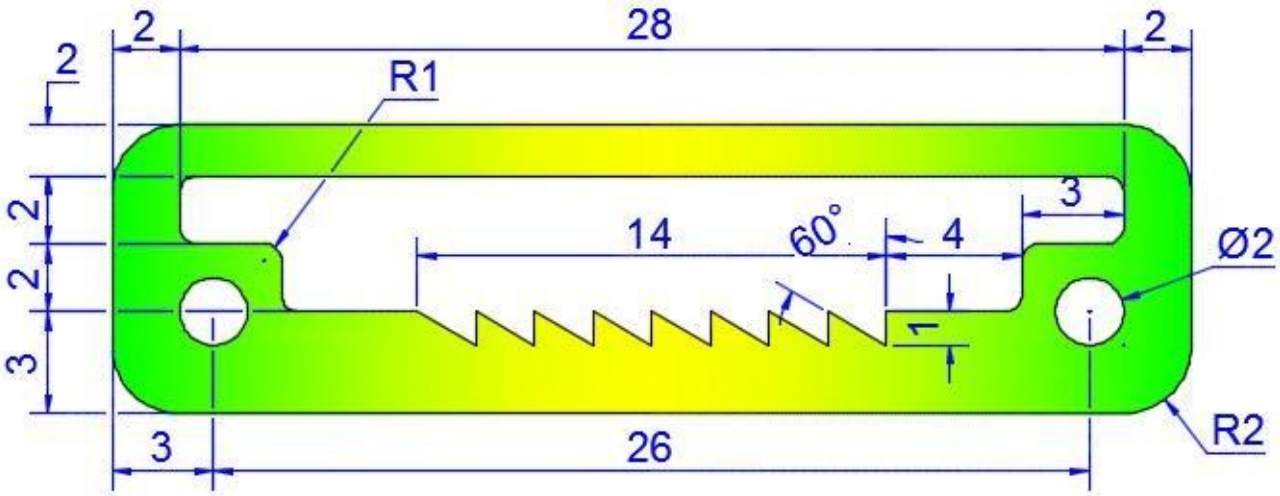
2
28
2
2
R1
2
2
3
14
60°
4
Ø2
1
3
26
R2

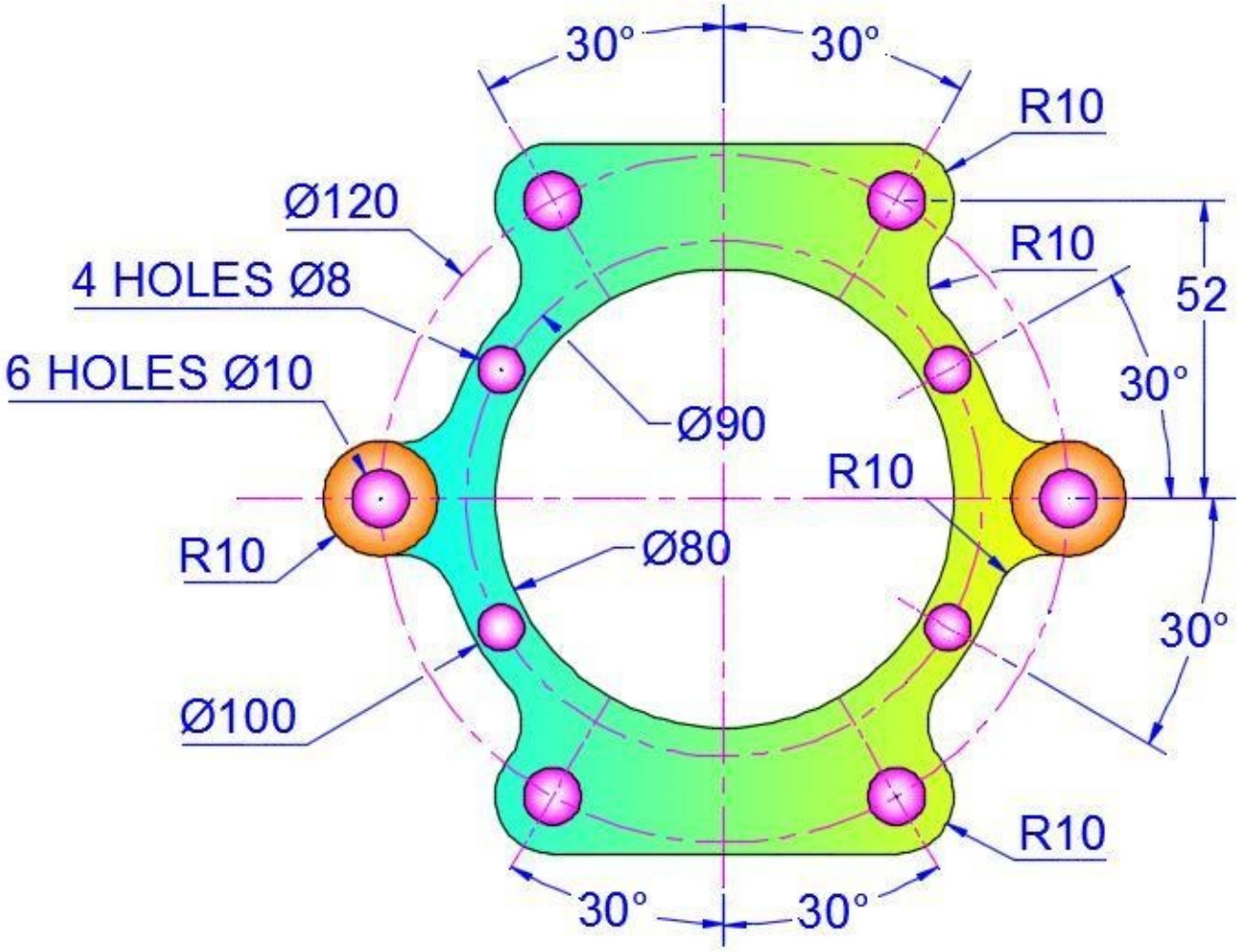
30°
30°
R10
Ø120
4 HOLES Ø8
R10
52
6 HOLES Ø10
30°
Ø90
R10
R10
Ø80
30°
Ø100
R10
30°
30°

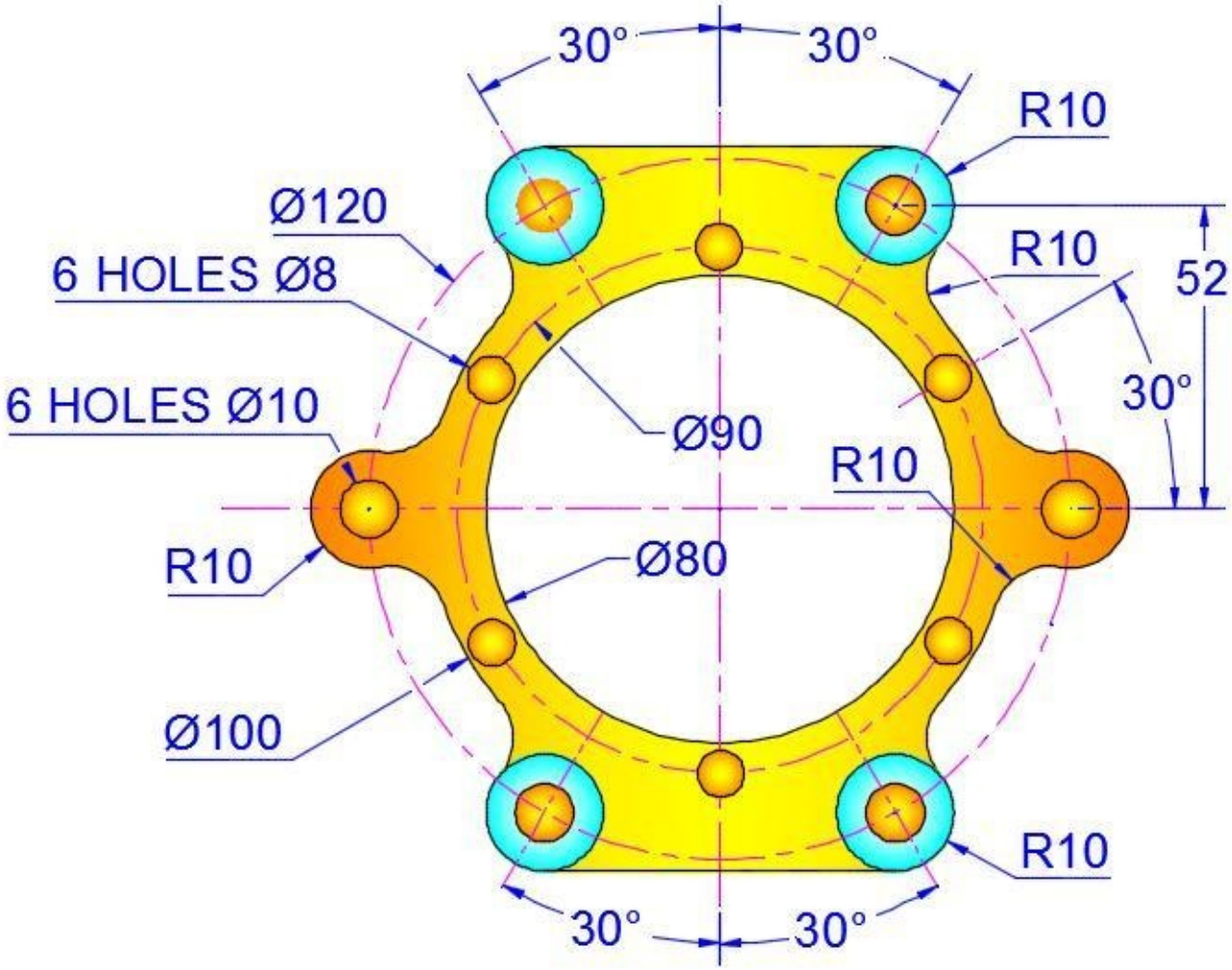
30°
30°
R10
Ø120
6 HOLES Ø8
R10
52
30°
6 HOLES Ø10
Ø90
R10
R10
Ø80
Ø100
R10
30°
30°

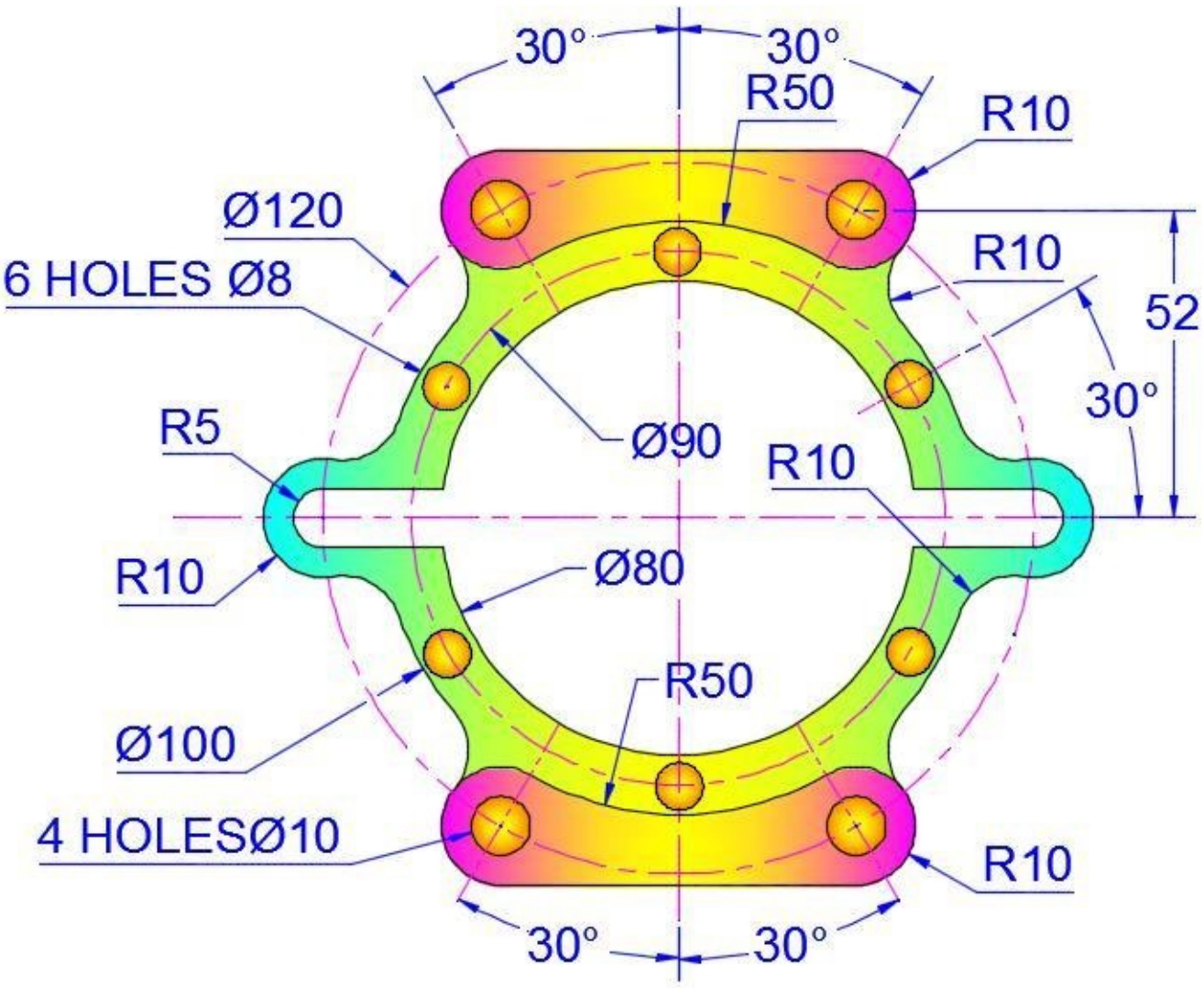
30°
30°
R50
R10
Ø120
6 HOLES Ø8
R10
52
30°
R5
Ø90
R10
R10
Ø80
R50
Ø100
4 HOLESØ10
R10
30°
30°

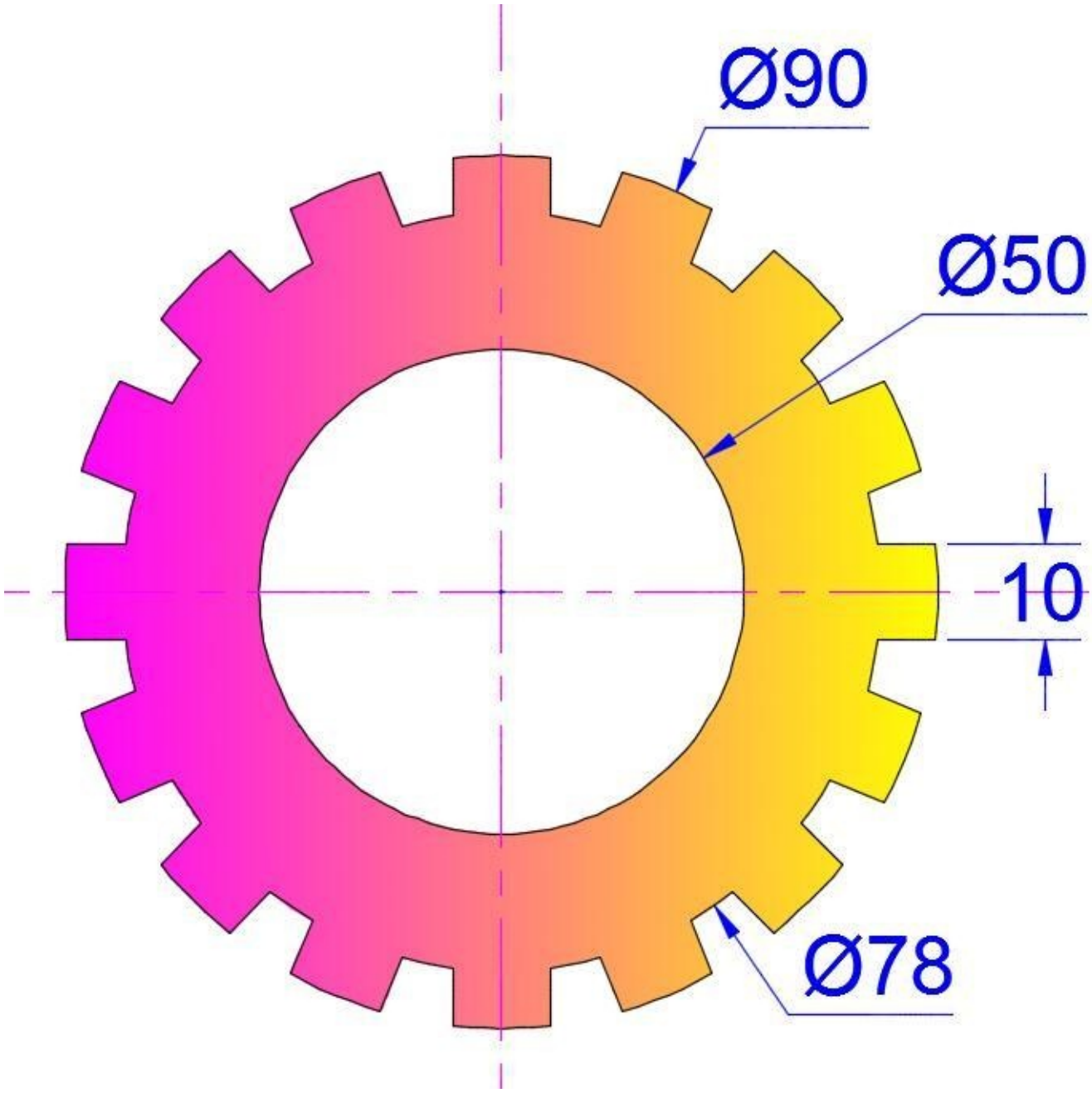
Ø90
Ø50
10
Ø78

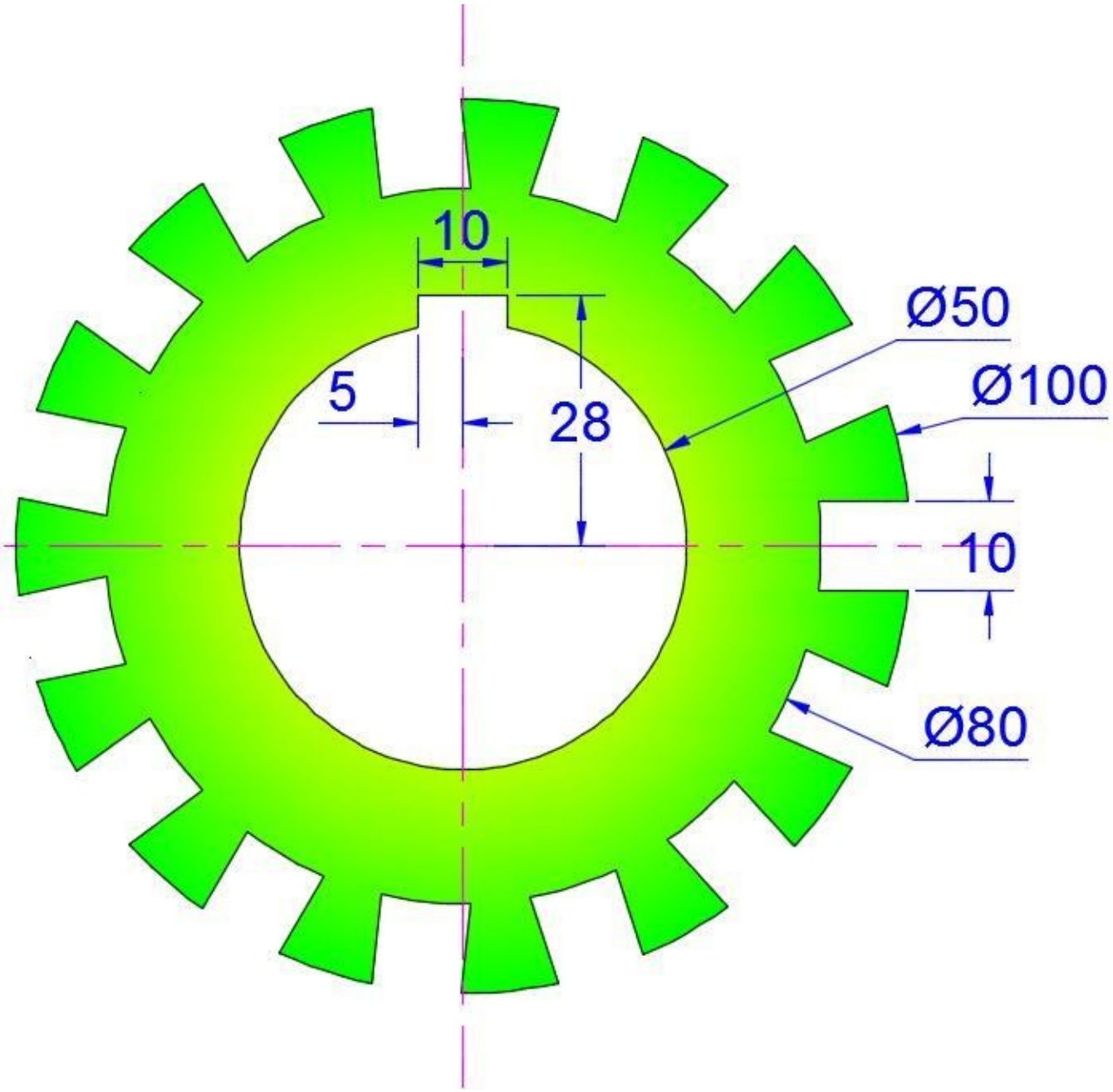
10
Ø50
Ø100
5
28
10
Ø80

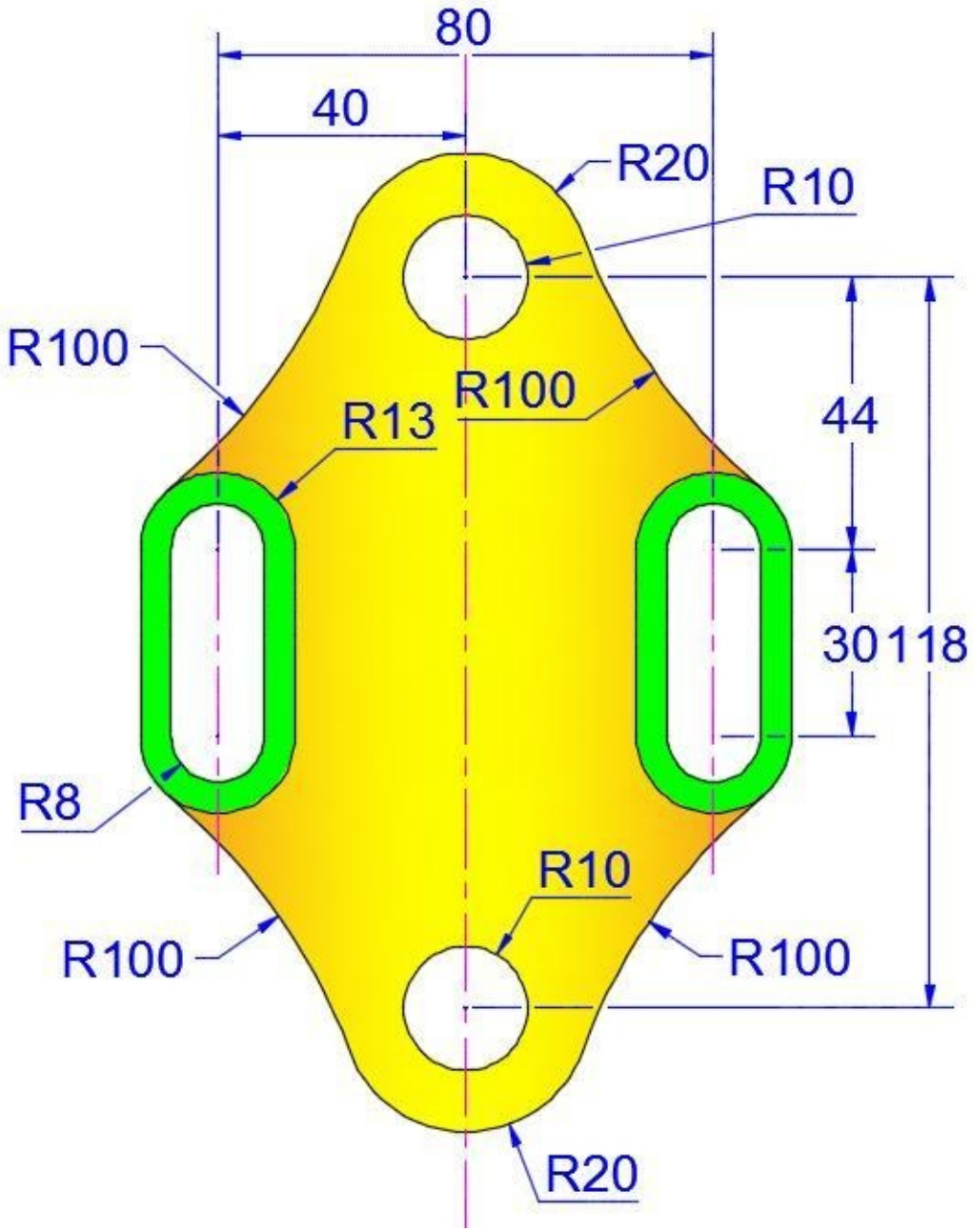
80
40
R20
R10
R100
R100
R13
44
30
118
R8
R10
R100
R100
R20

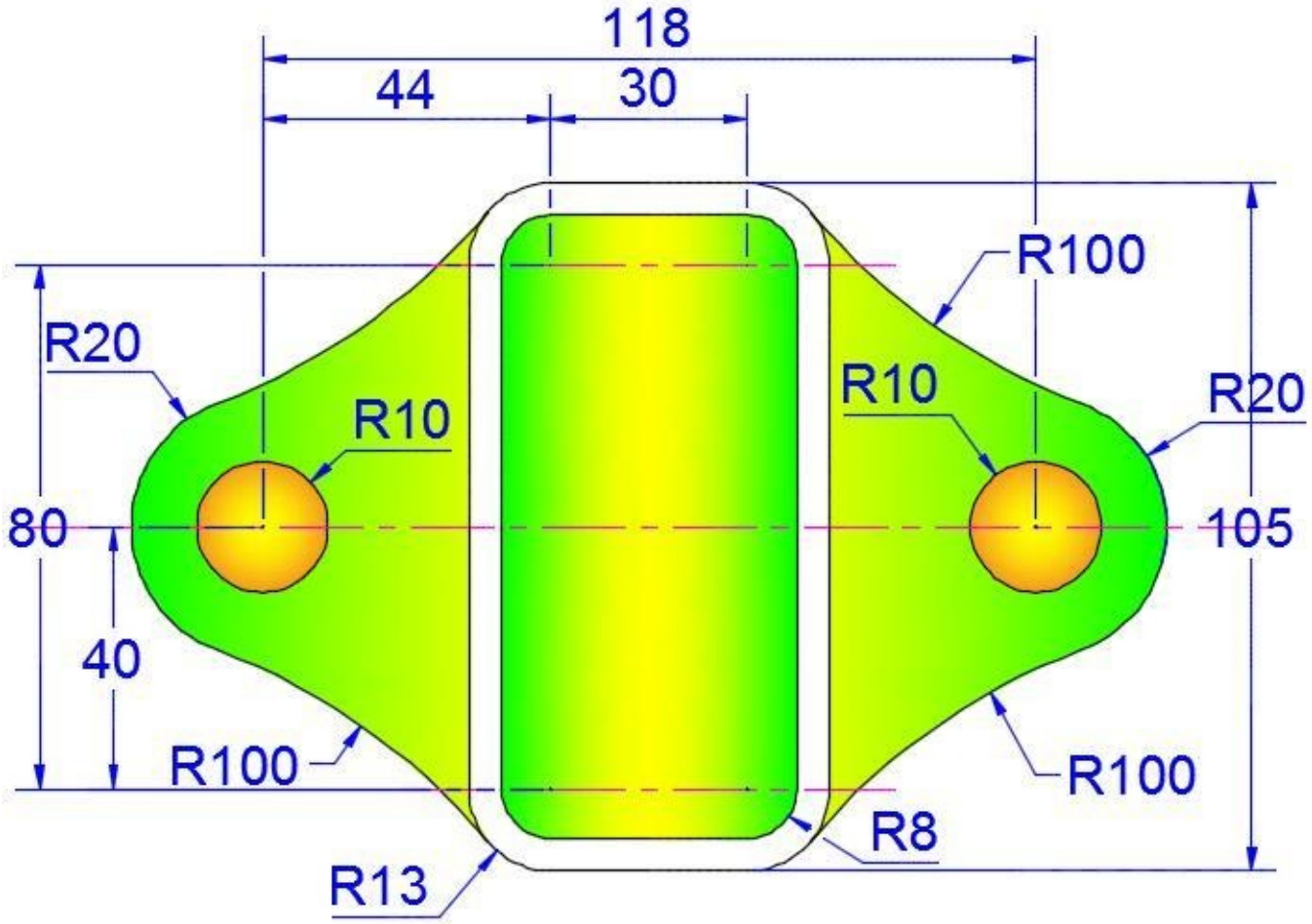
118
44
30
R100
R20
R10
R10
R20
80
105
40
R100
R100
R8
R13

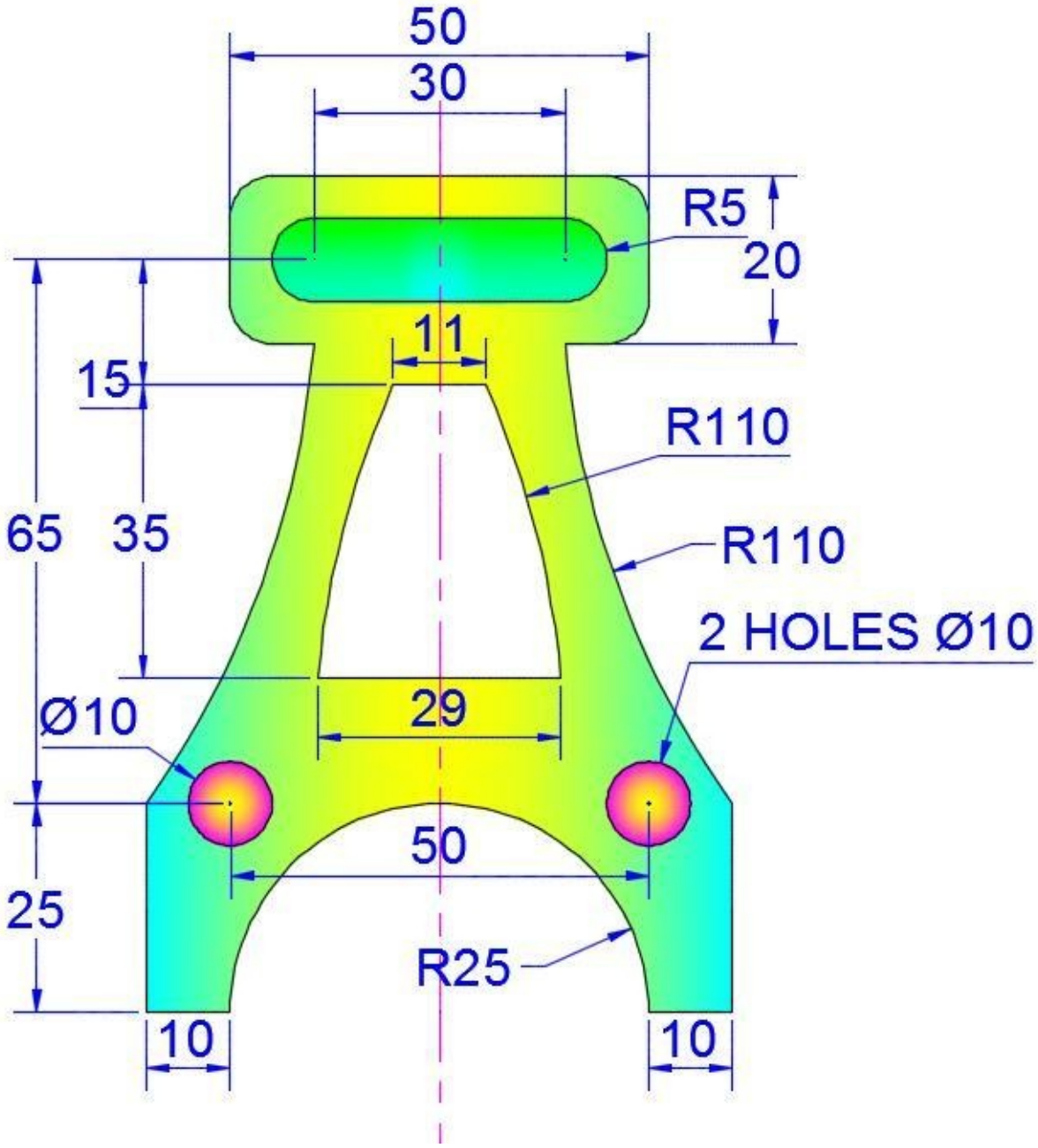
50
30
R5
20
11
15
R110
65
35
R110
2 HOLES Ø10
Ø10
29
50
25
R25
10
10

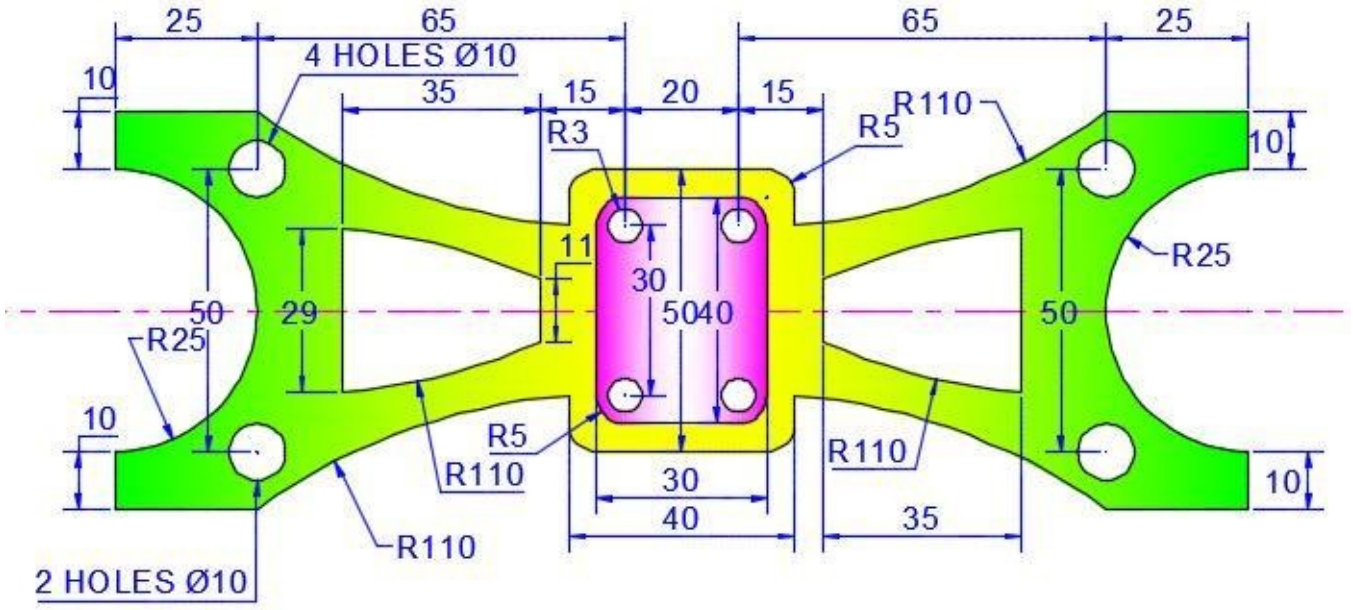
25
65
65
25
4 HOLES Ø10
10
35
15
20
15
R110
R5
R3
10
11
30
R25
50
29
50
40
50
R25
10
R5
R110
R110
30
R110
10
40
35
R110
2 HOLES Ø10

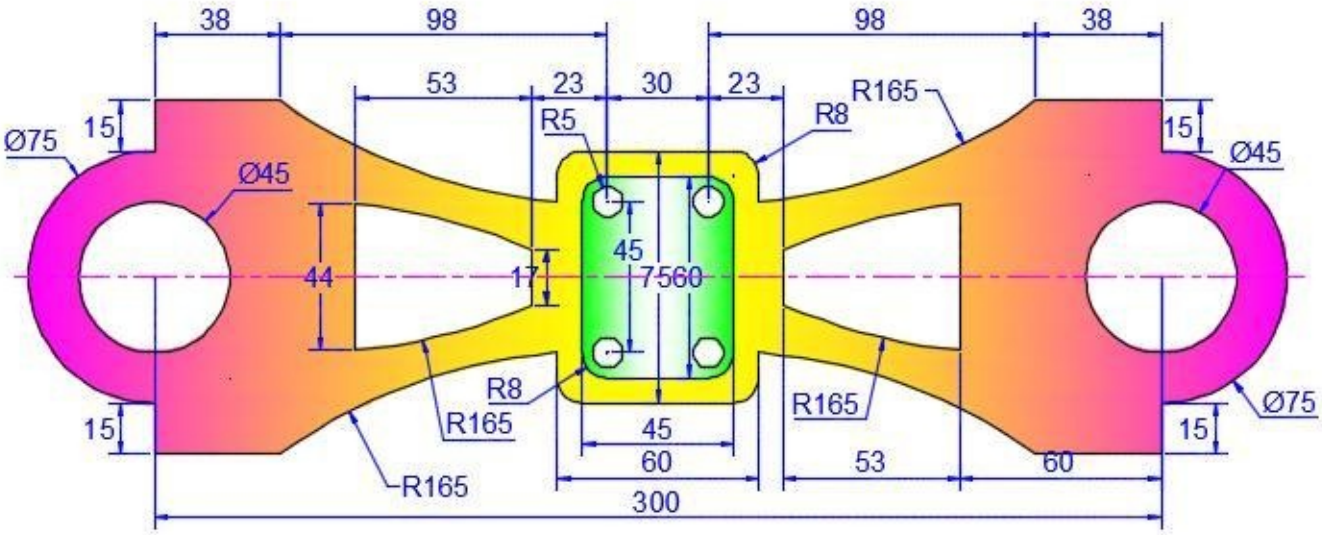
38
98
98
38
53
23
30
23
R165
R5
R8
15
15
Ø75
Ø45
Ø45
44
17
45
7560
R8
R165
R165
Ø75
15
15
45
60
53
60
R165
300

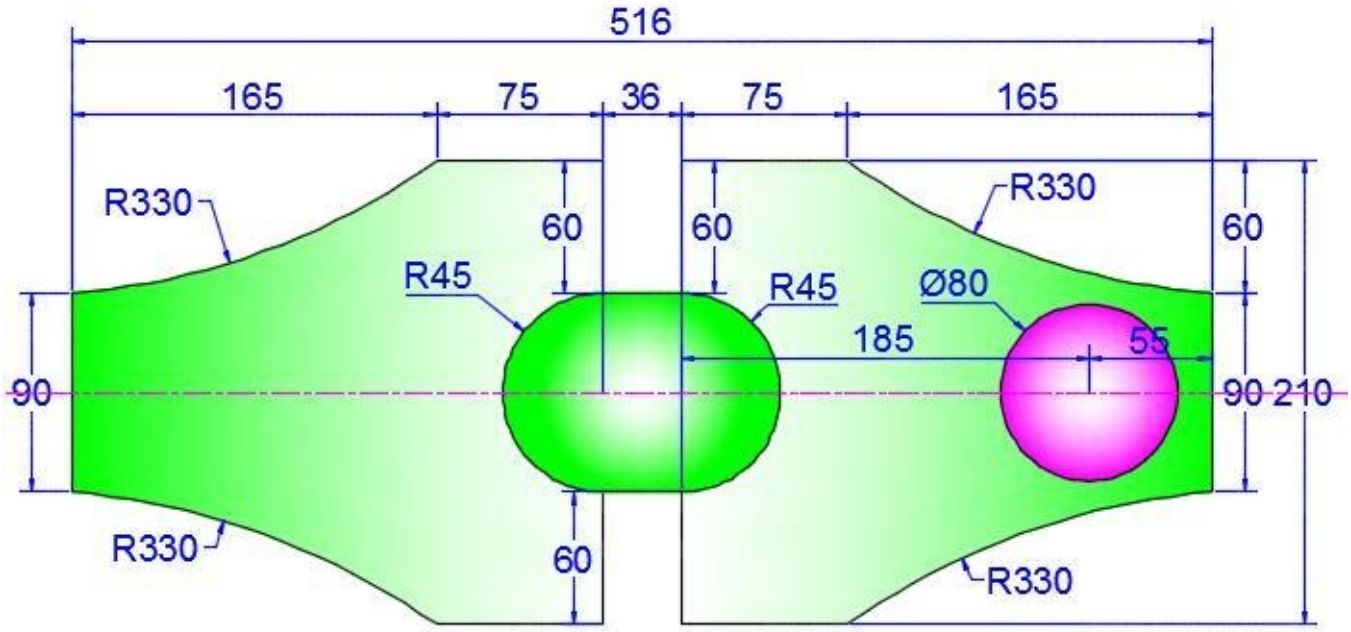
516
165
75
36
75
165
R330
R330
60
60
60
R45
R45
Ø80
185
55
90
90
210
R330
R330
60

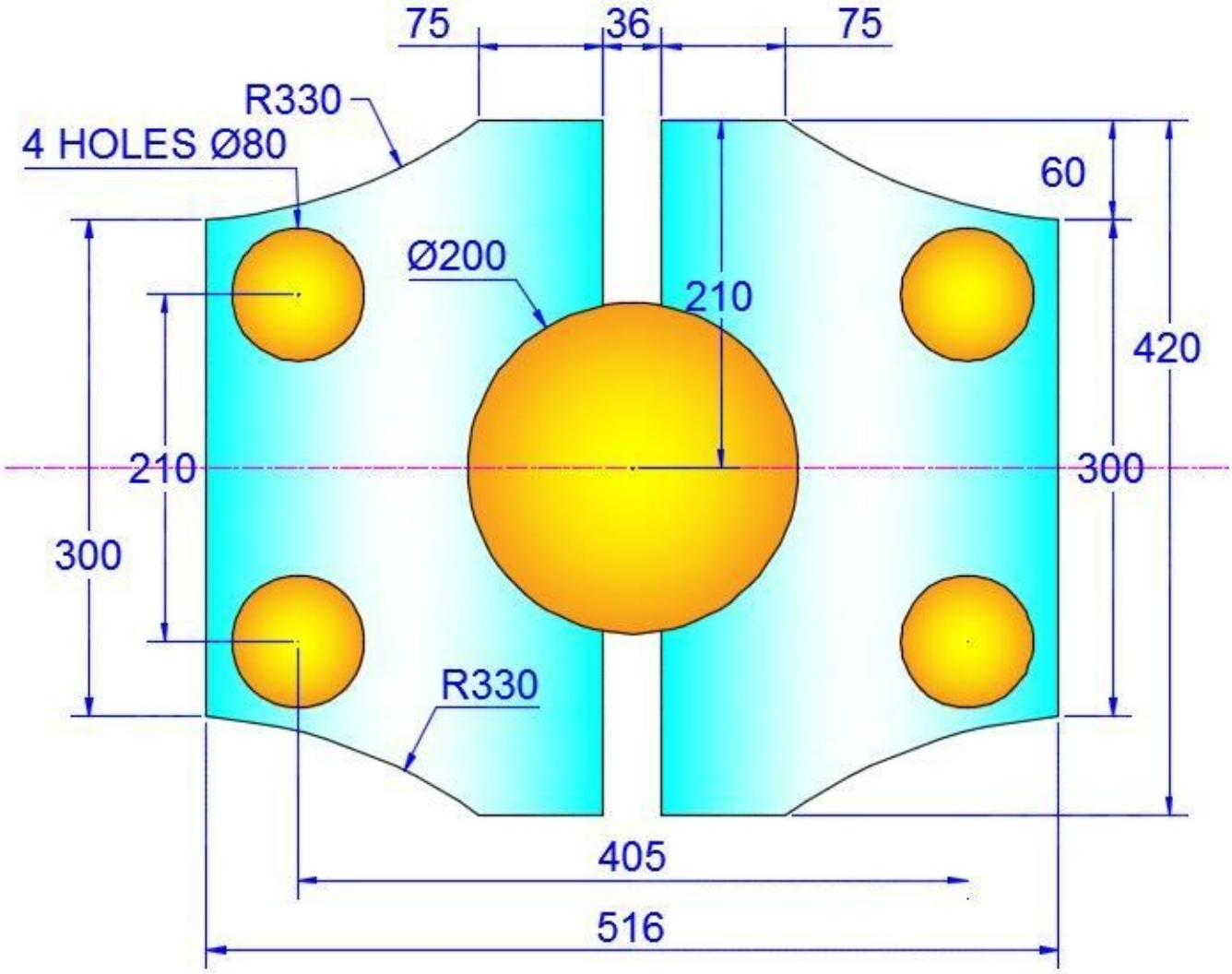
75
36
75
R330
4 HOLES Ø80
60
Ø200
210
420
210
300
300
R330
405
516

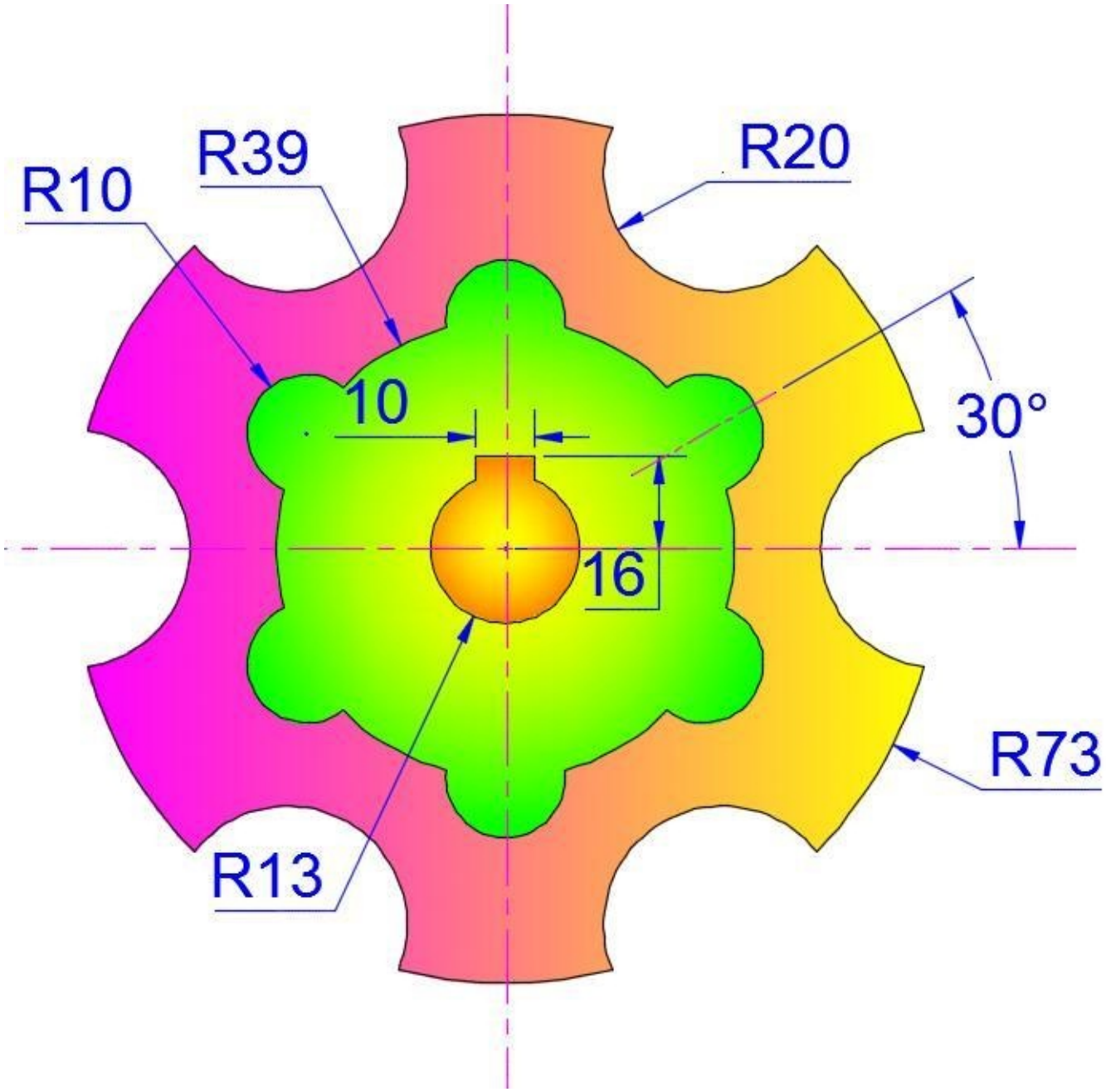
R10
R39
R20
10
30°
16
R73
R13

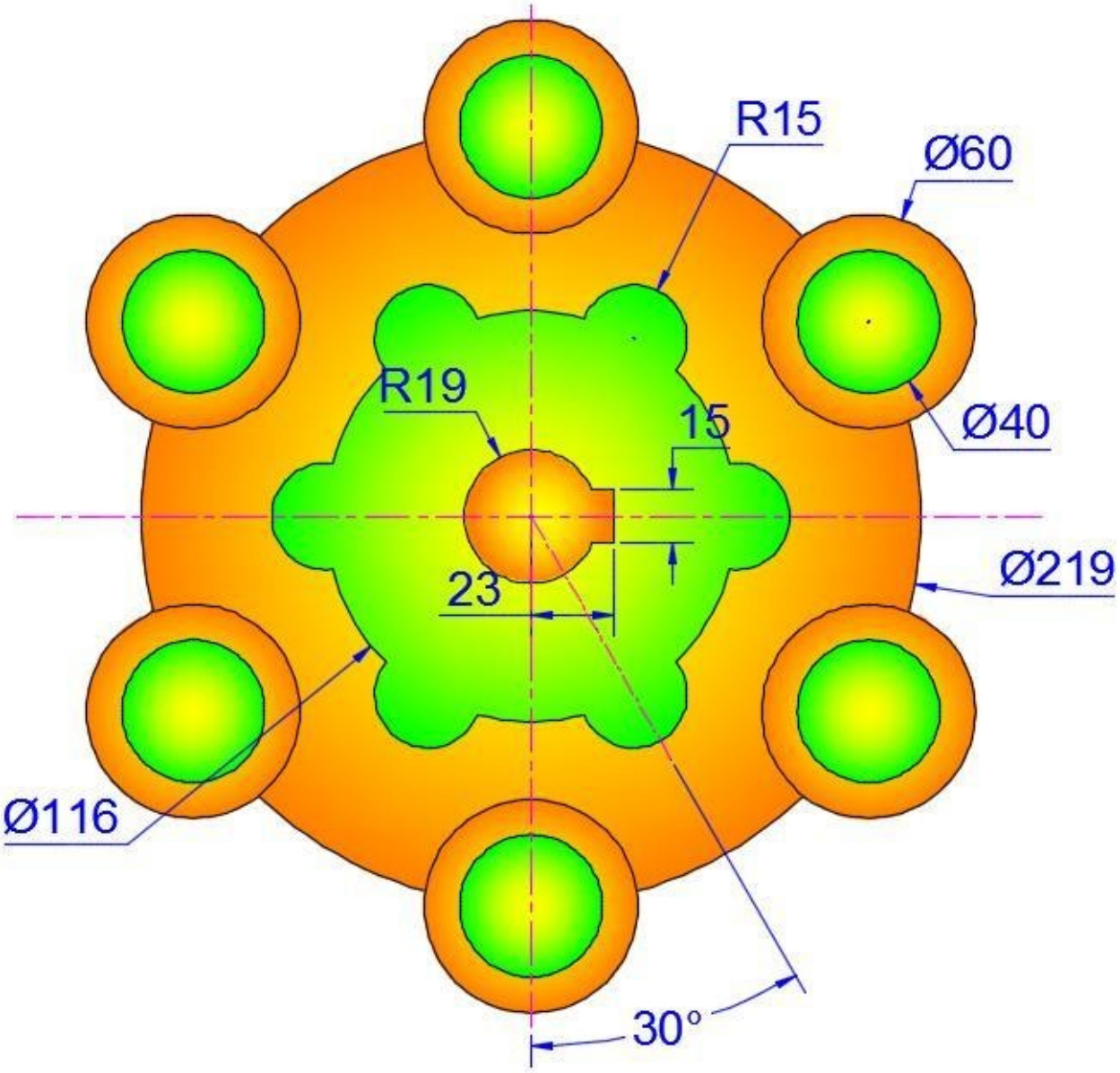
R15
Ø60
R19
15
Ø40
23
Ø219
Ø116
30°

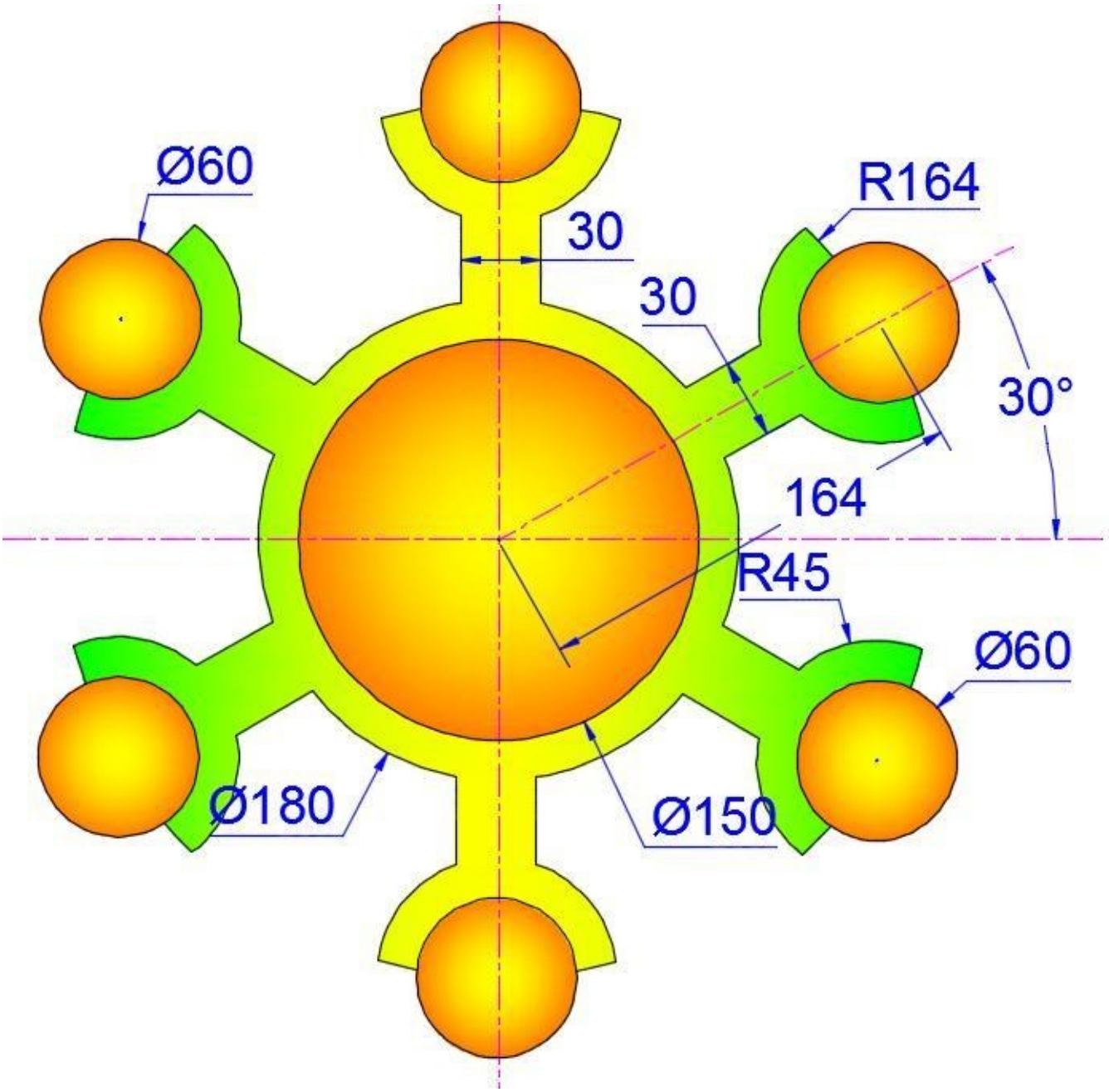
Ø60
R164
30
30
30°
164
R45
Ø60
Ø180
Ø150

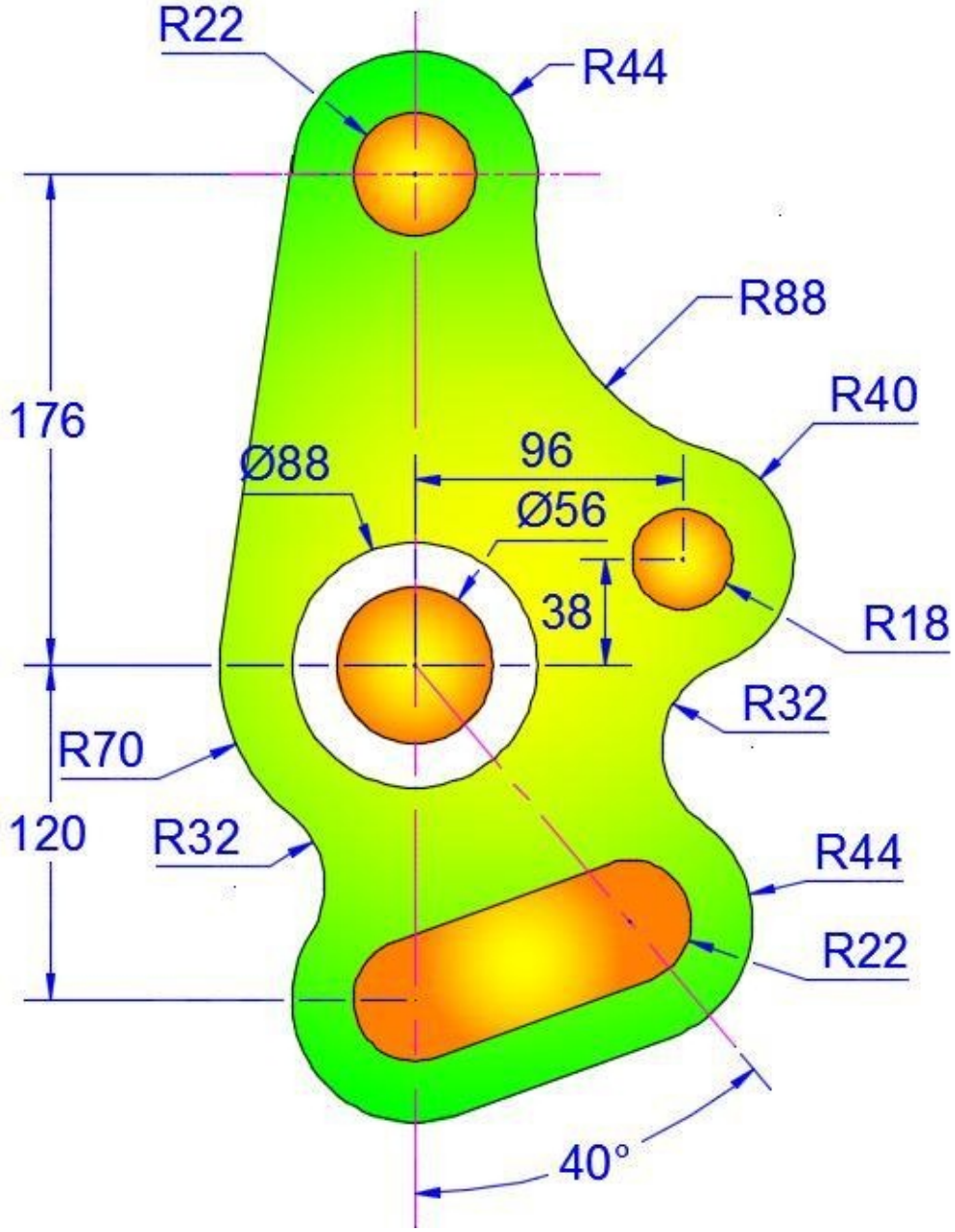
R22
R44
R88
R40
176
Ø88
96
Ø56
38
R18
R32
R70
120
R32
R44
R22
40°

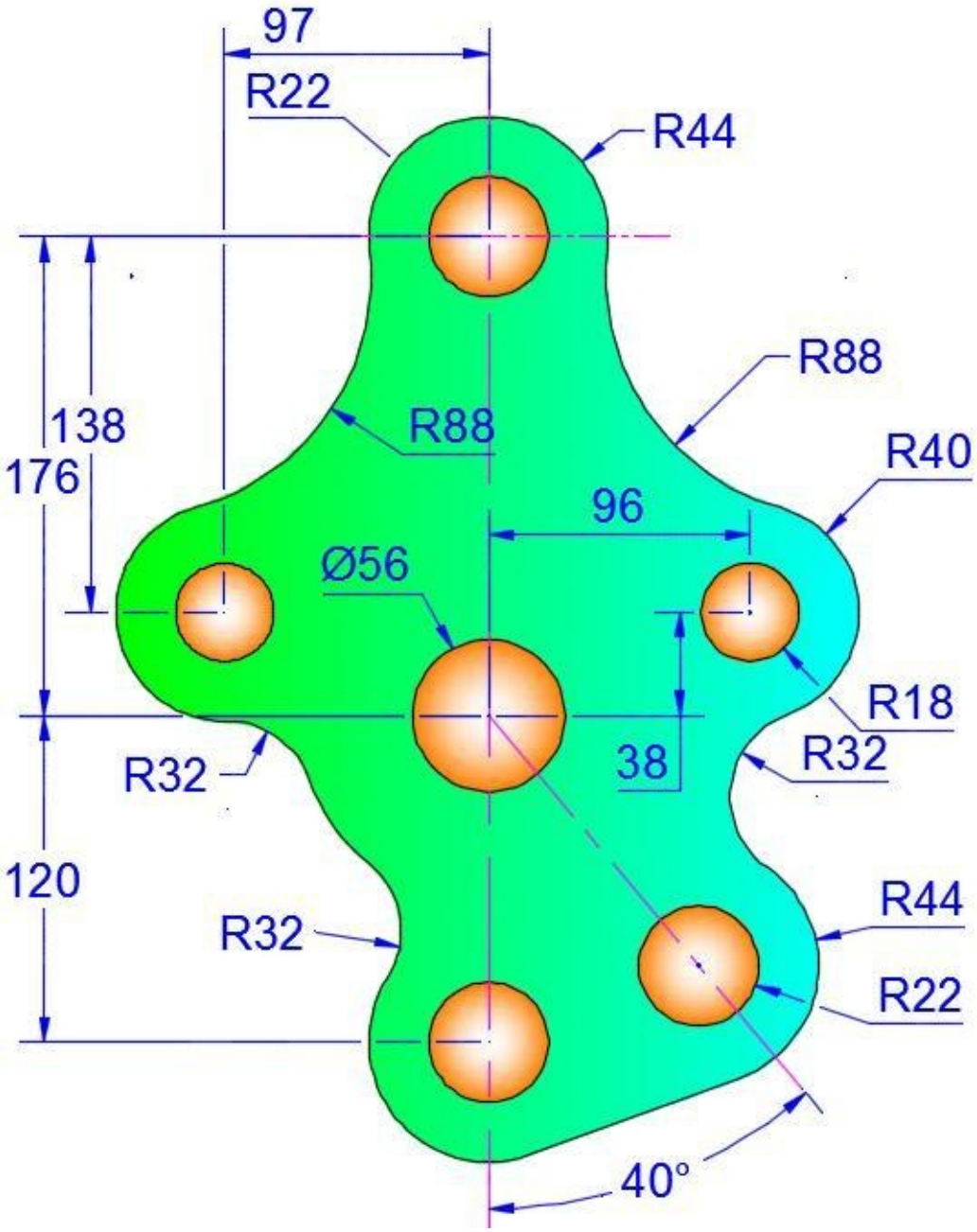
97
R22
R44
R88
138
176
R88
R40
96
Ø56
R18
38
R32
R32
120
R44
R32
R22
40°

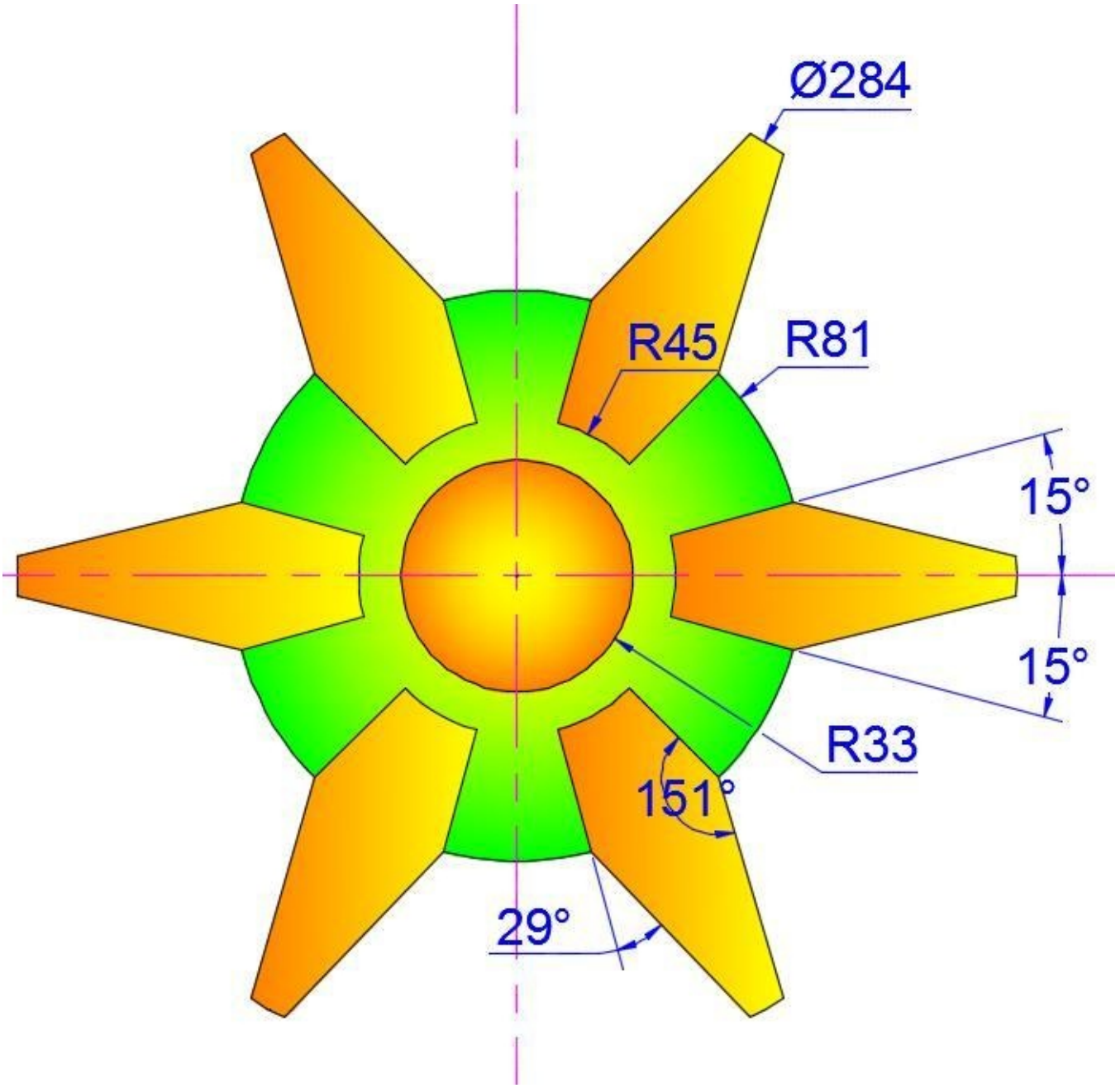
Ø284
R45
R81
15°
15°
R33
151°
29°

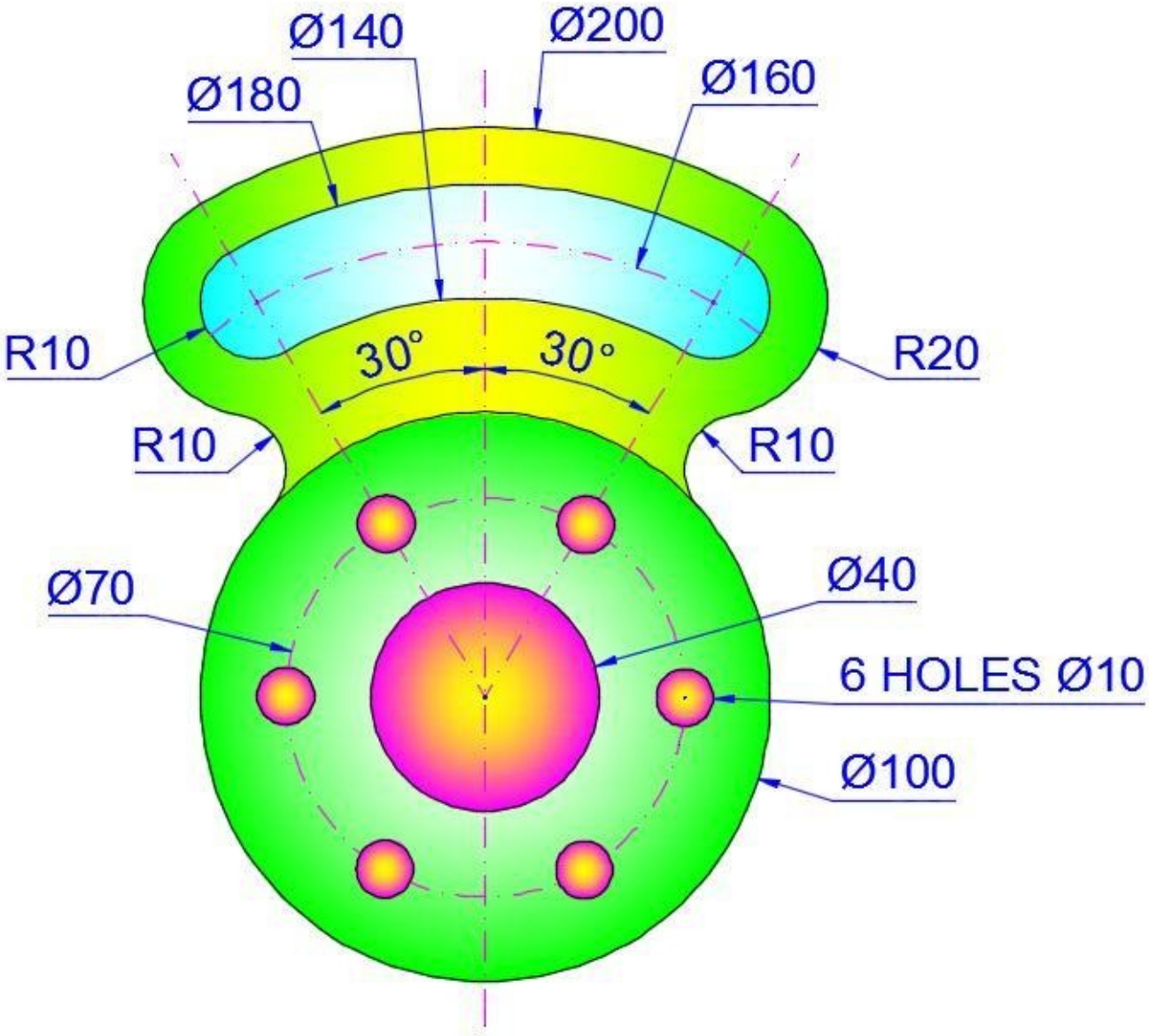
Ø140
Ø200
Ø180
Ø160
R10
30°
30°
R20
R10
R10
Ø70
Ø40
6 HOLES Ø10
Ø100

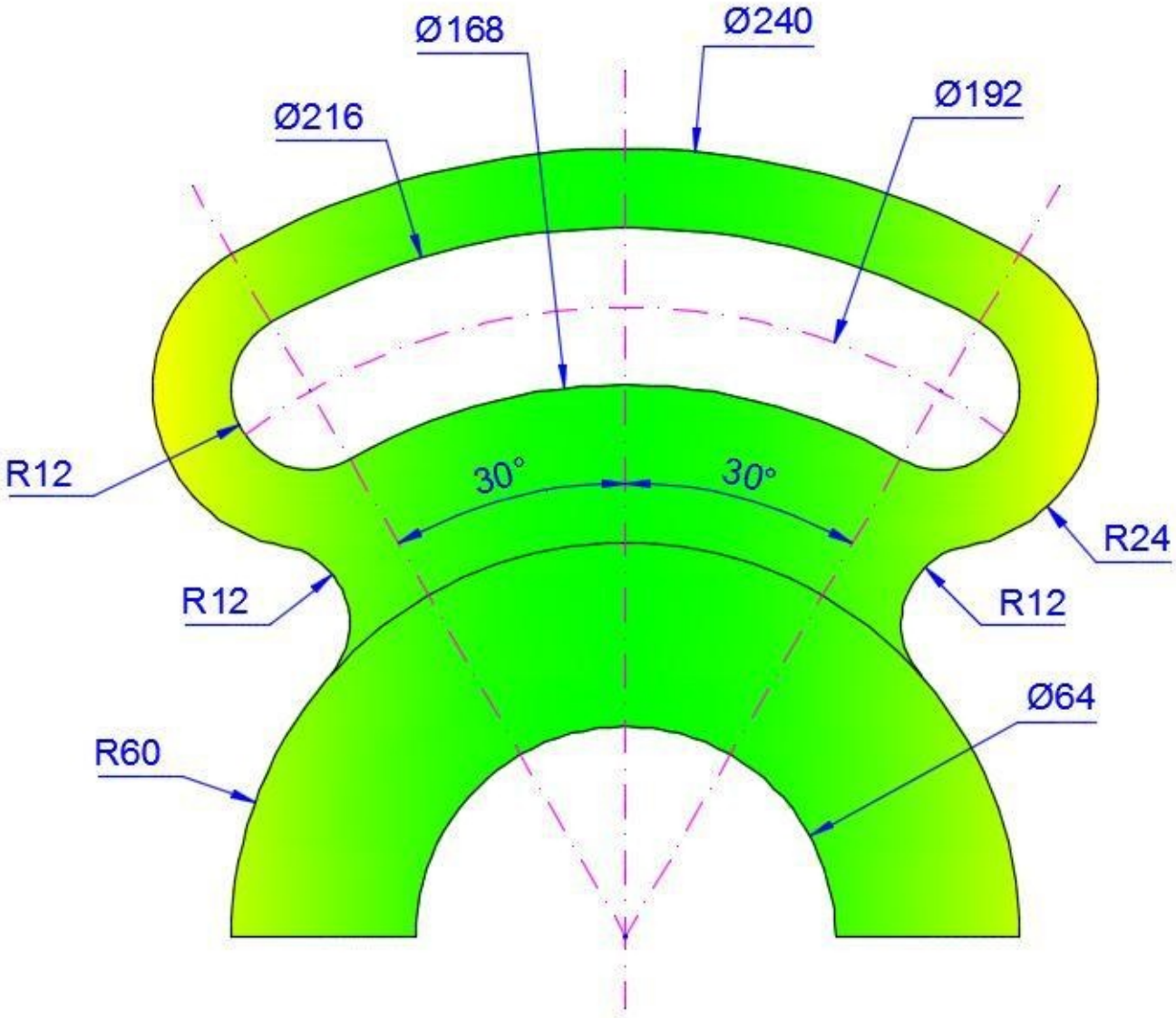
Ø168
Ø240
Ø216
Ø192
R12
30°
30°
R24
R12
R12
Ø64
R60

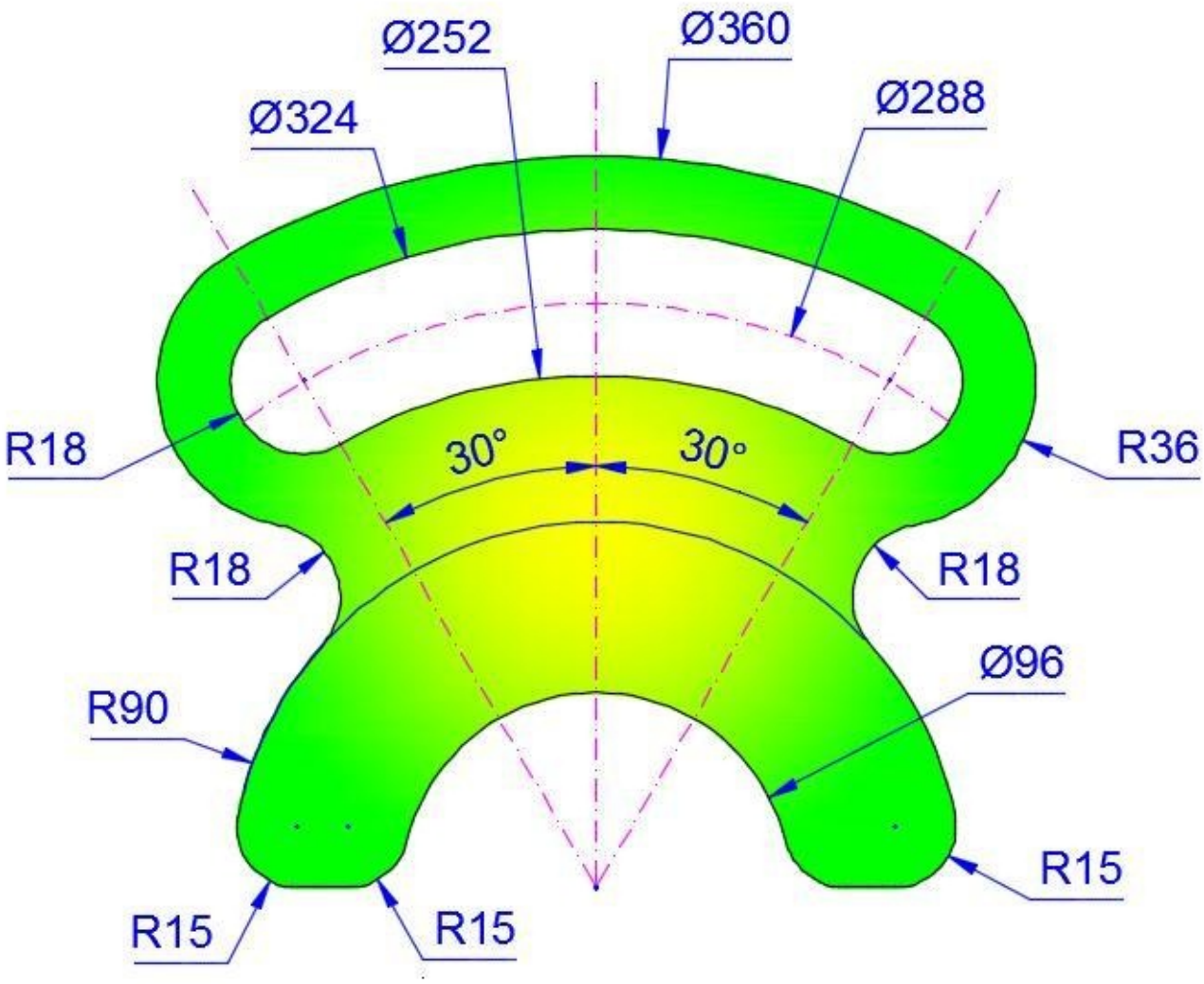
Ø252
Ø360
Ø324
Ø288
R18
30°
30°
R36
R18
R18
Ø96
R90
R15
R15
R15

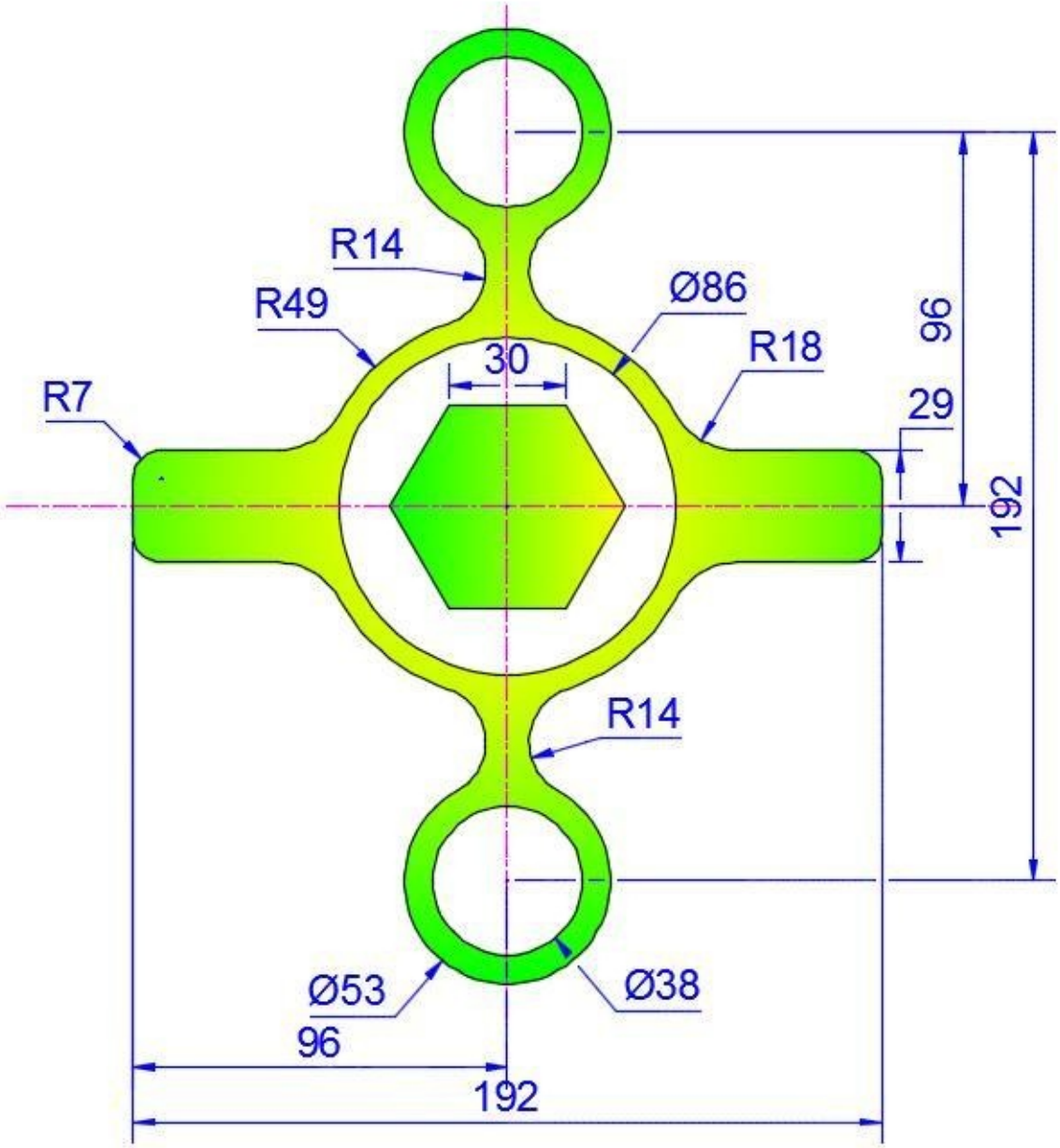
R14
R49
Ø86
R18
30
R7
29
96
192
R14
Ø53
Ø38
96
192

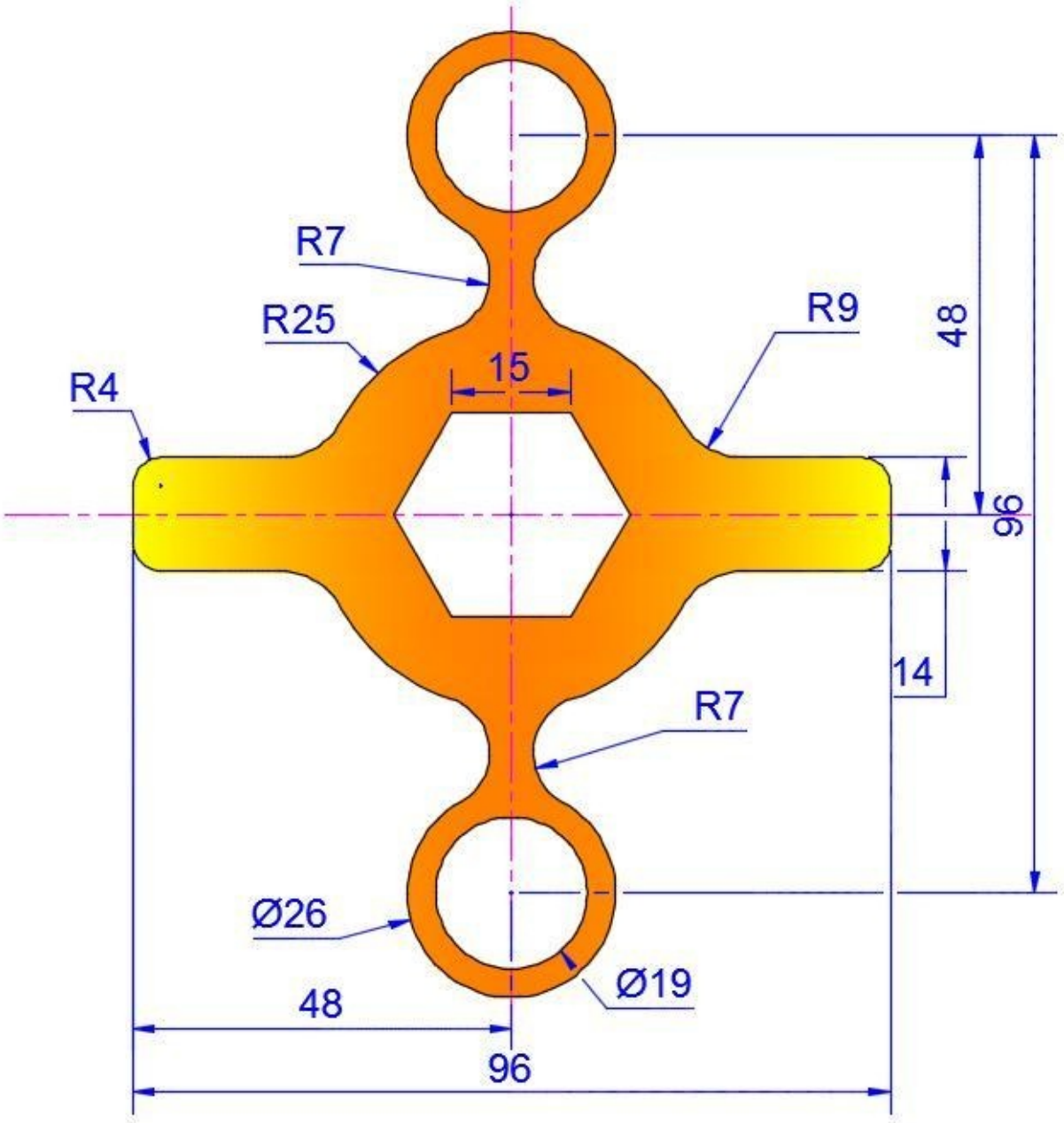
R7
R25
R4
15
R9
48
96
14
R7
Ø26
Ø19
48
96

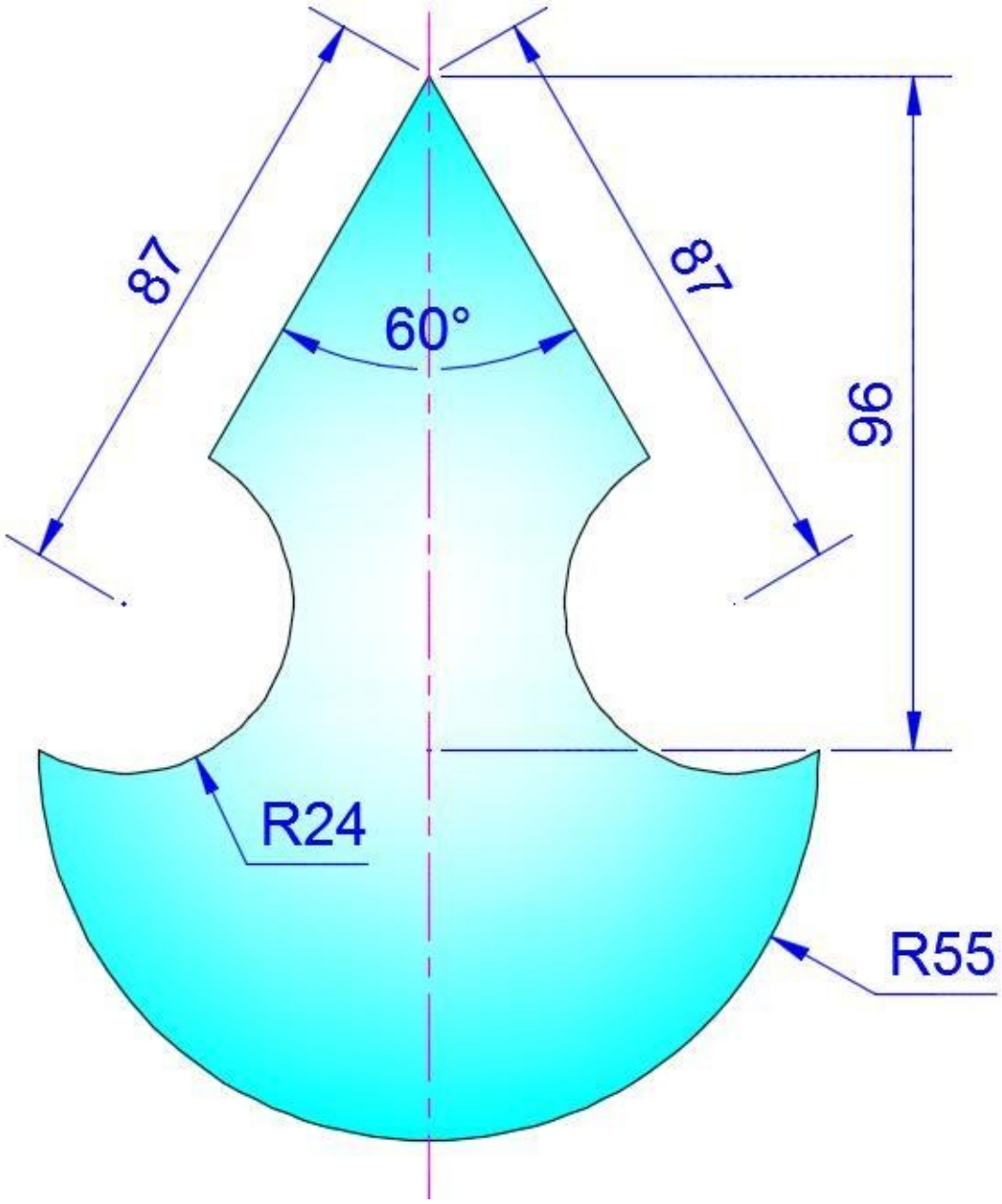
87
87
60°
96
R24
R55

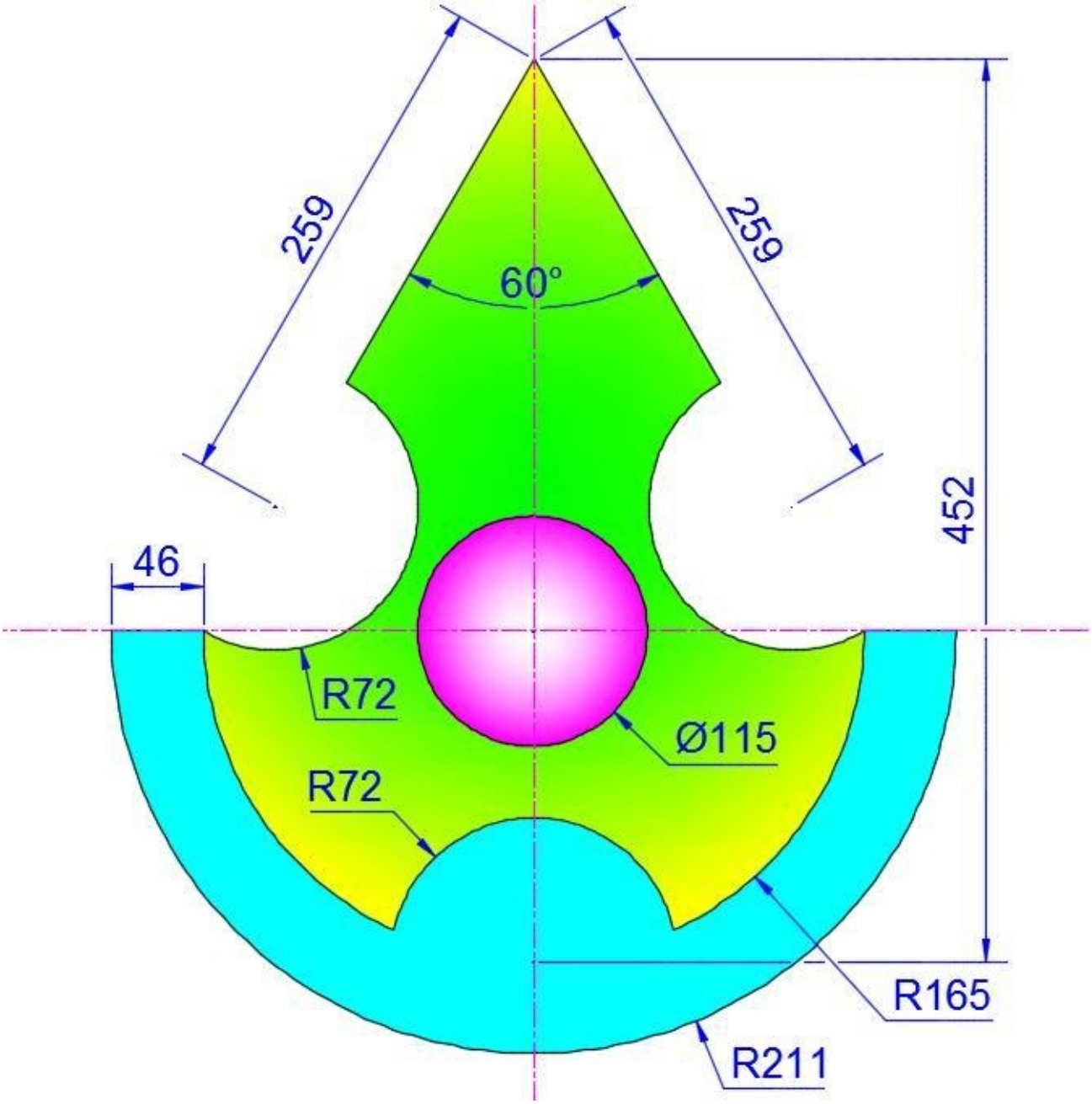
259
259
60°
452
46
R72
Ø115
R72
R165
R211

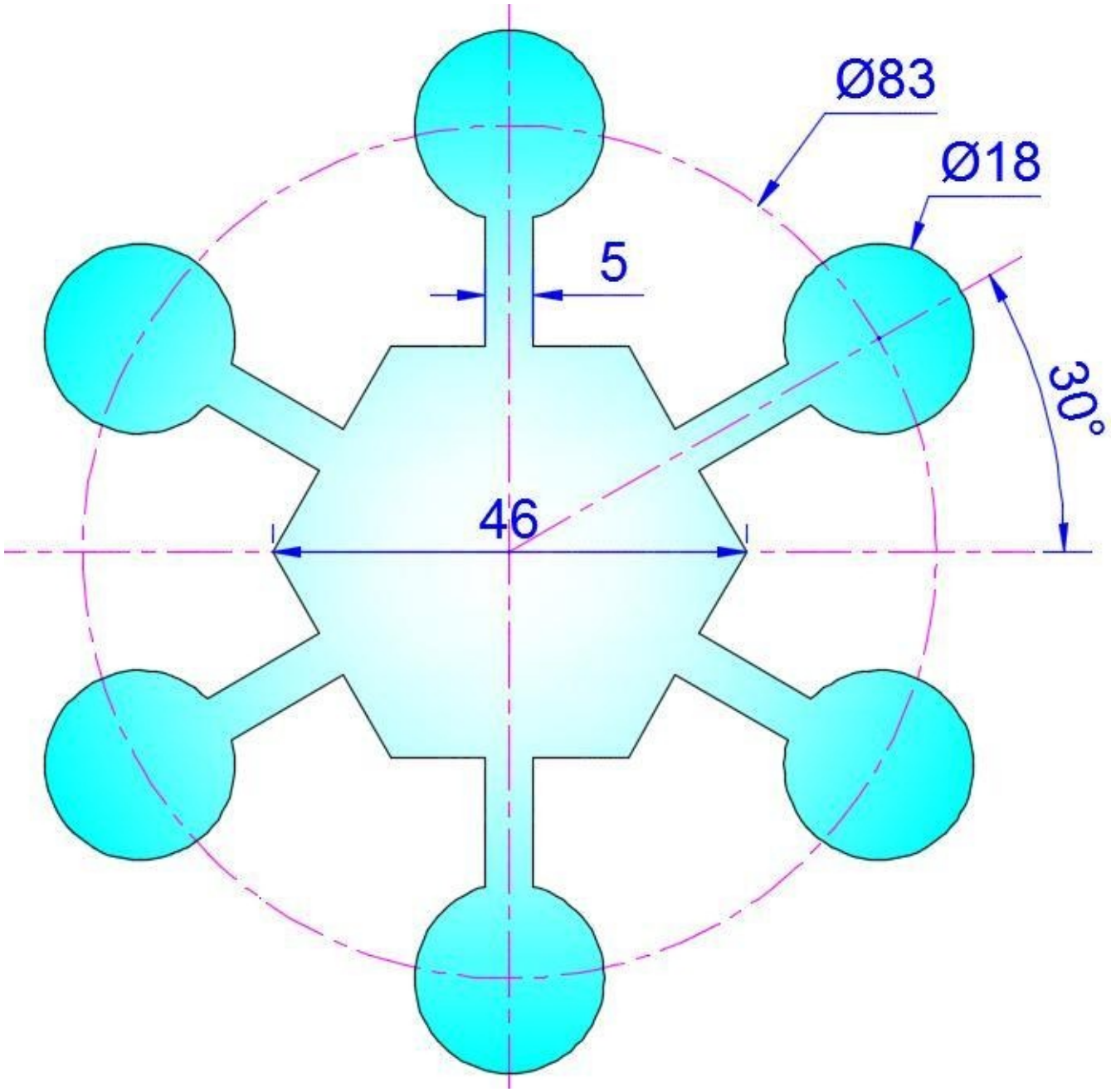
Ø83
Ø18
5
30°
46

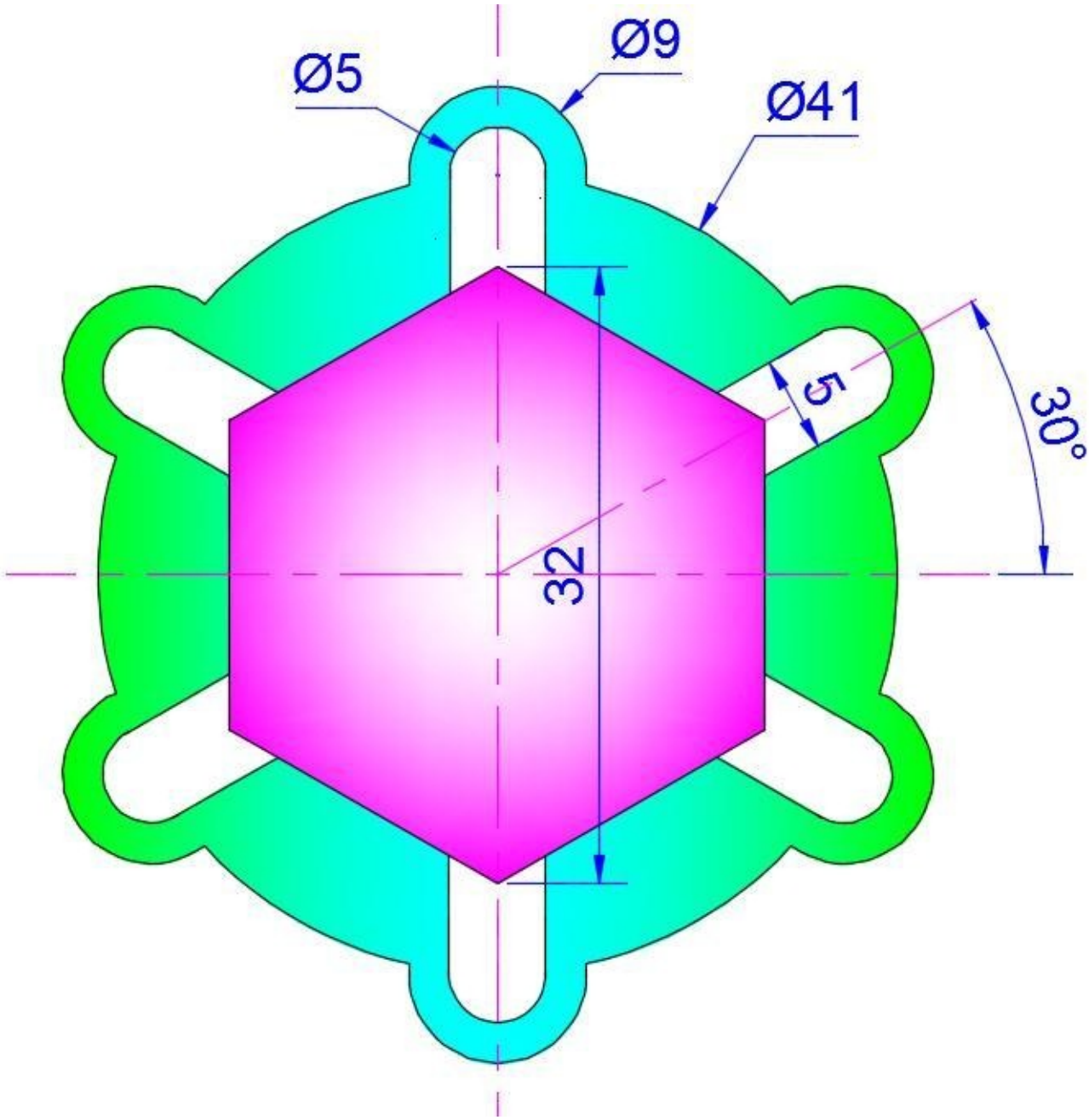
Ø5
Ø9
Ø41
5
30°
32

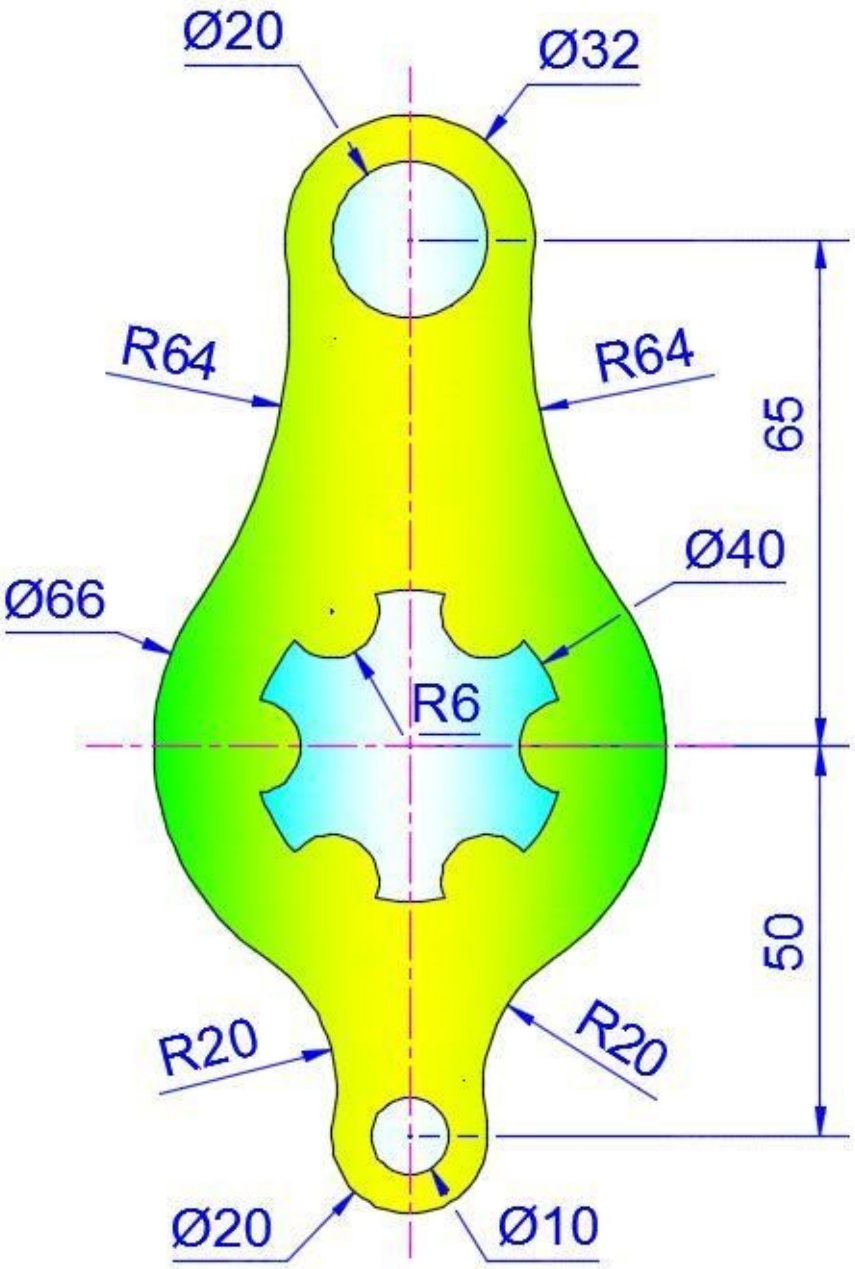
Ø20
Ø32
R64
R64
65
Ø40
Ø66
R6
50
R20
R20
Ø20
Ø10

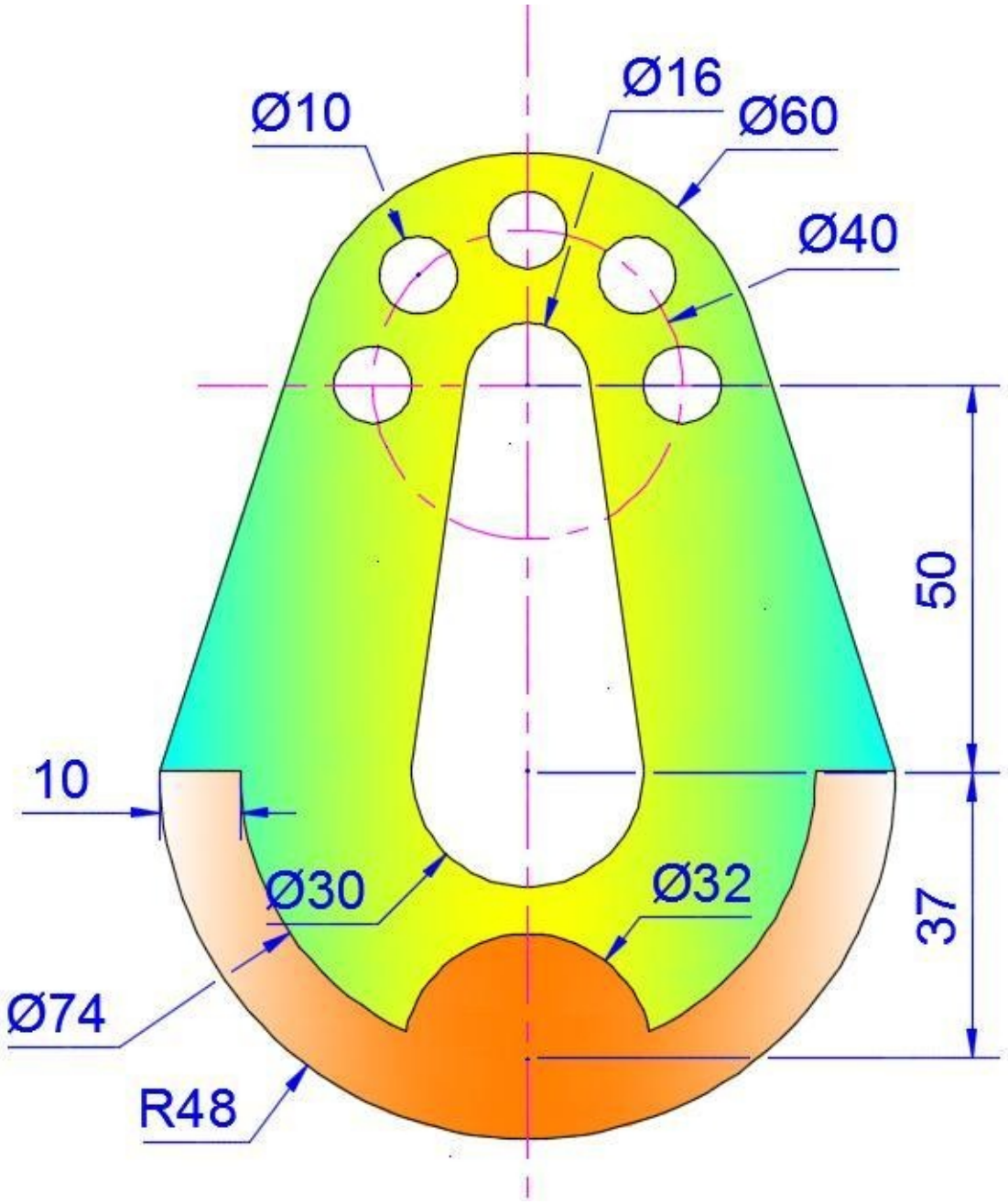
Ø10
Ø16
Ø60
Ø40
50
10
Ø30
Ø32
37
Ø74
R48

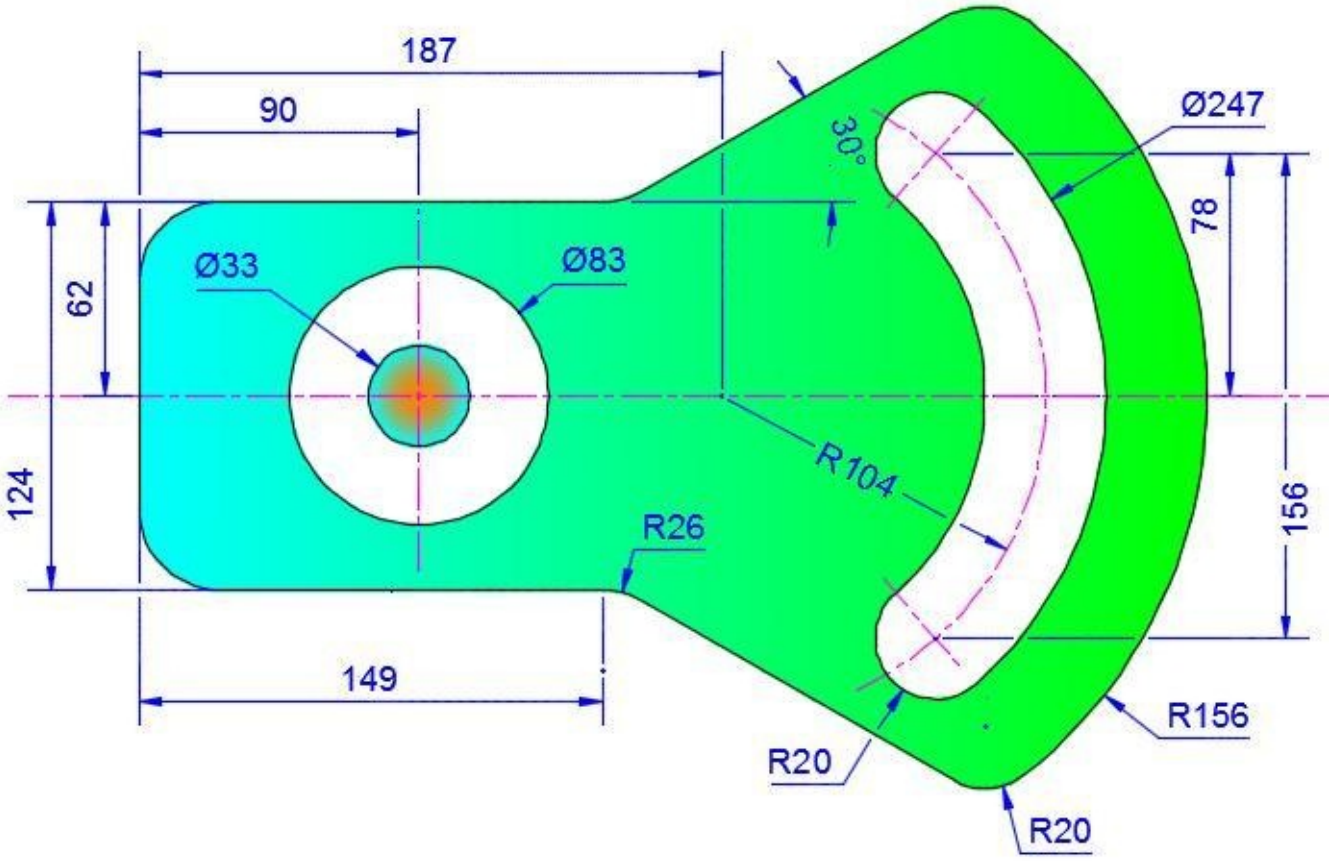
187
90
30°
Ø247
78
62
Ø33
Ø83
124
R104
156
R26
149
R156
R20
R20

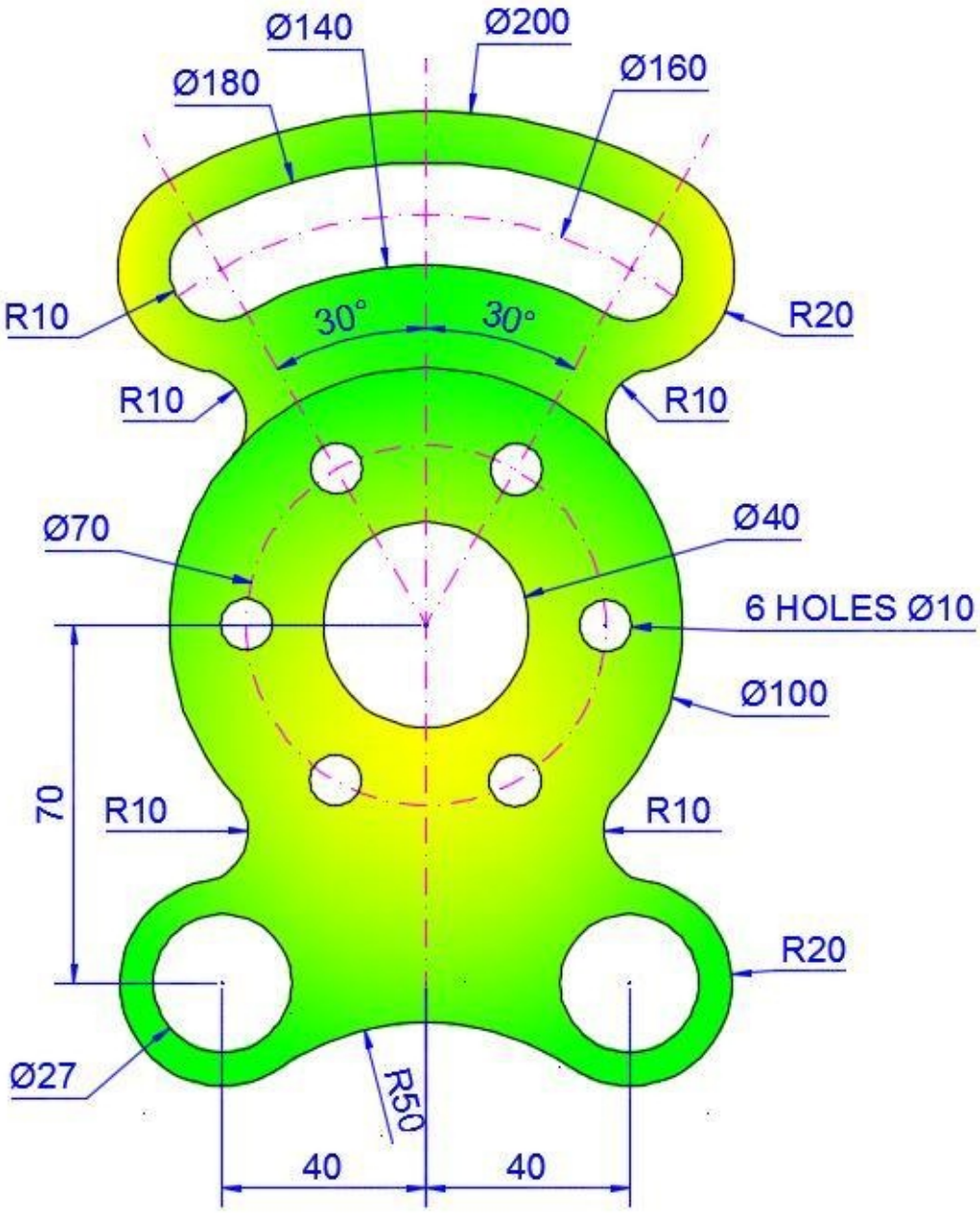
Ø140
Ø200
Ø180
Ø160
R10
30°
30°
R20
R10
R10
Ø70
Ø40
6 HOLES Ø10
Ø100
70
R10
R10
R20
Ø27
R50
40
40

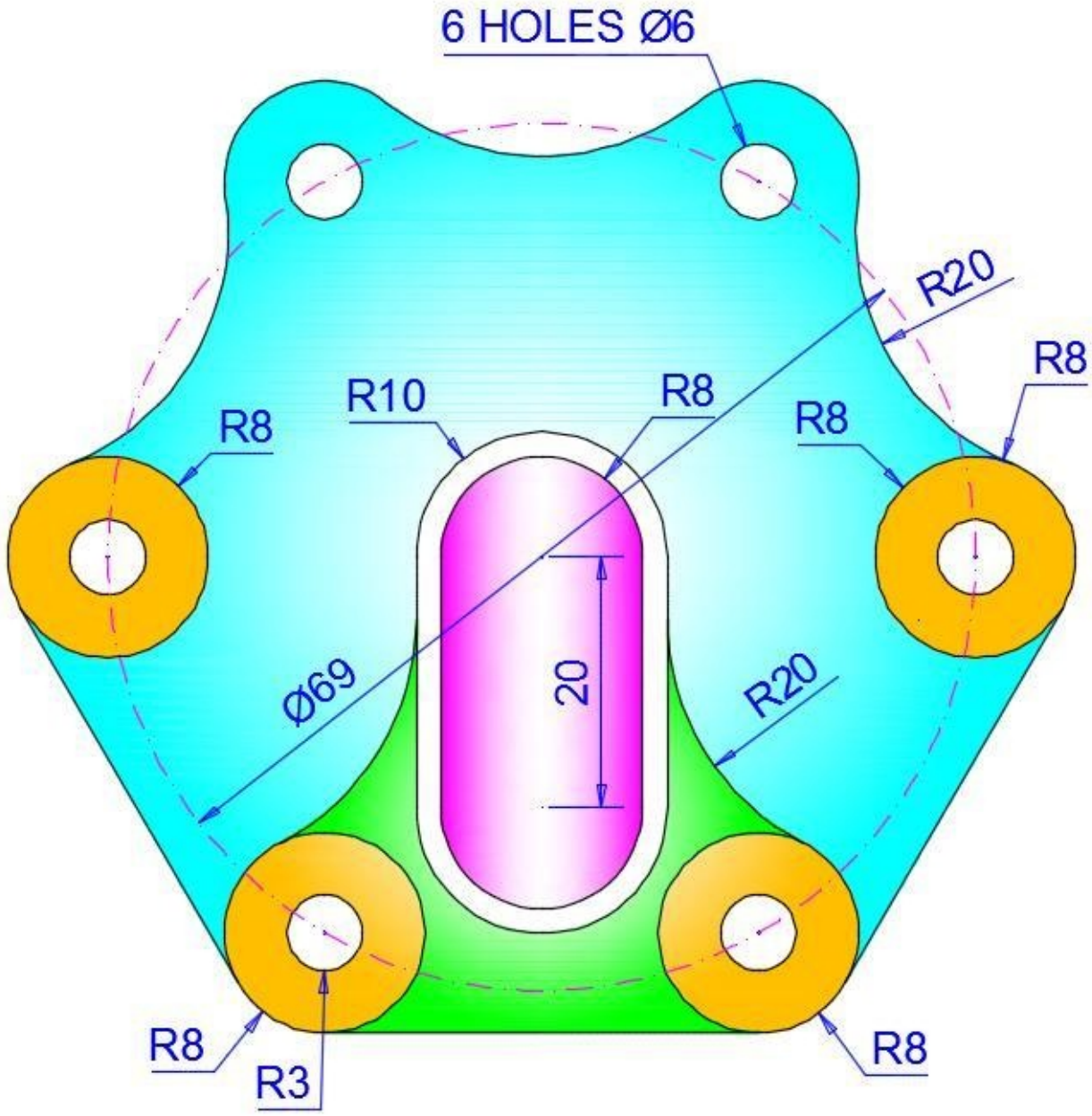
6 HOLES Ø6
R20
R8
R10
R8
R8
R8
20
Ø69
R20
R8
R3
R8

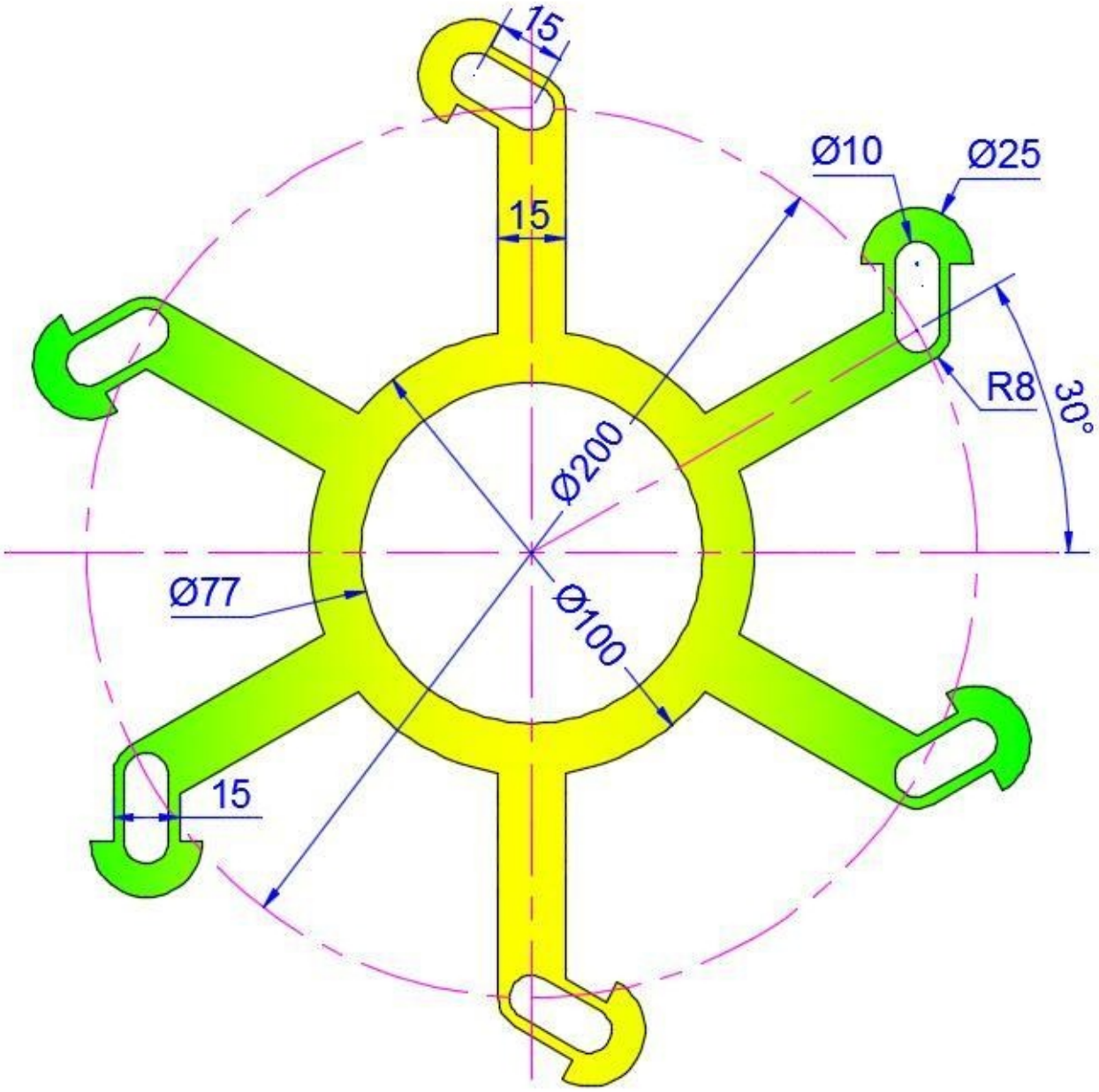
15
15
Ø10
Ø25
R8
30°
Ø200
Ø100
Ø77
15

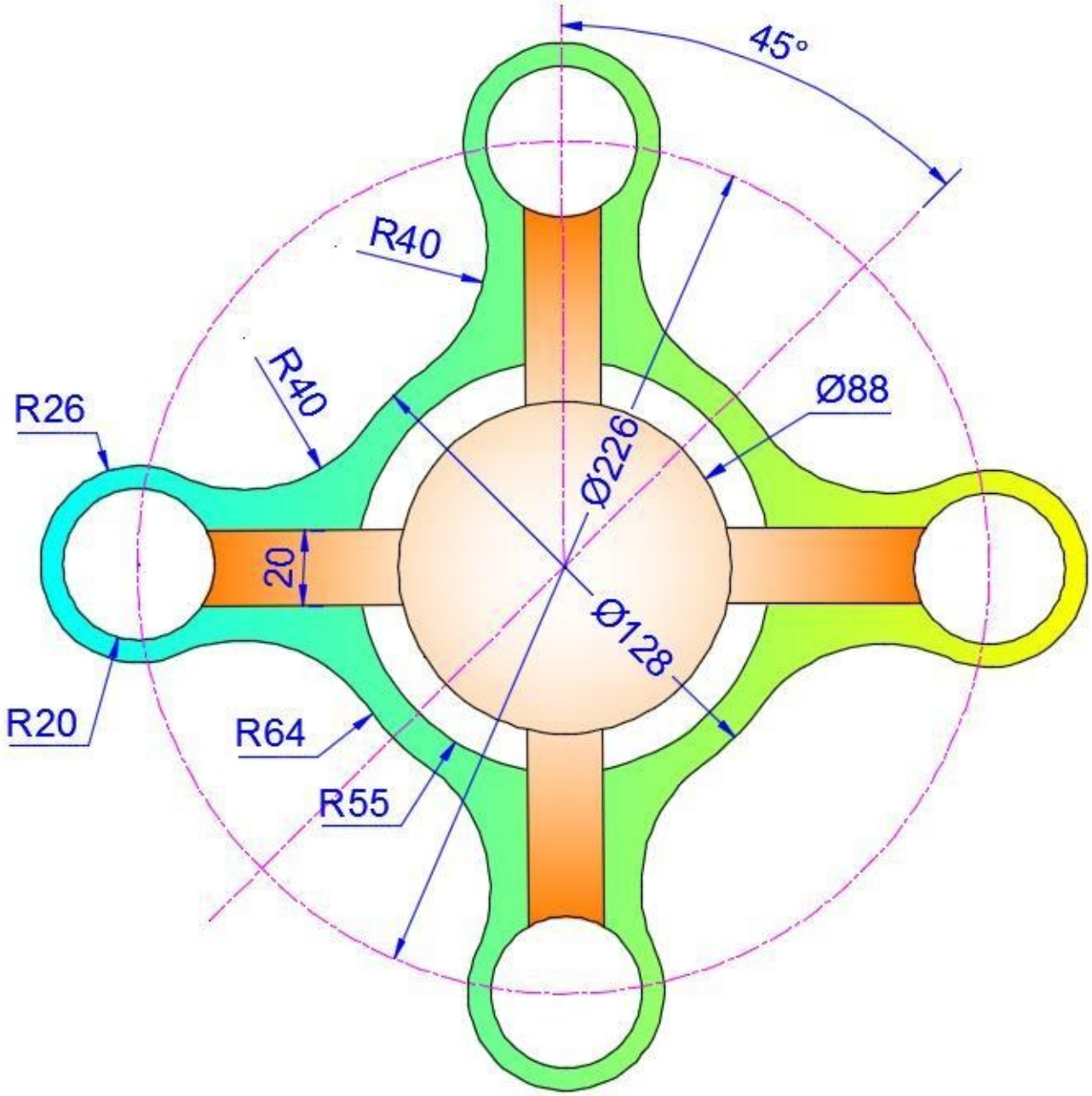
45°
R40
R40
R26
Ø88
Ø226
20
Ø128
R20
R64
R55

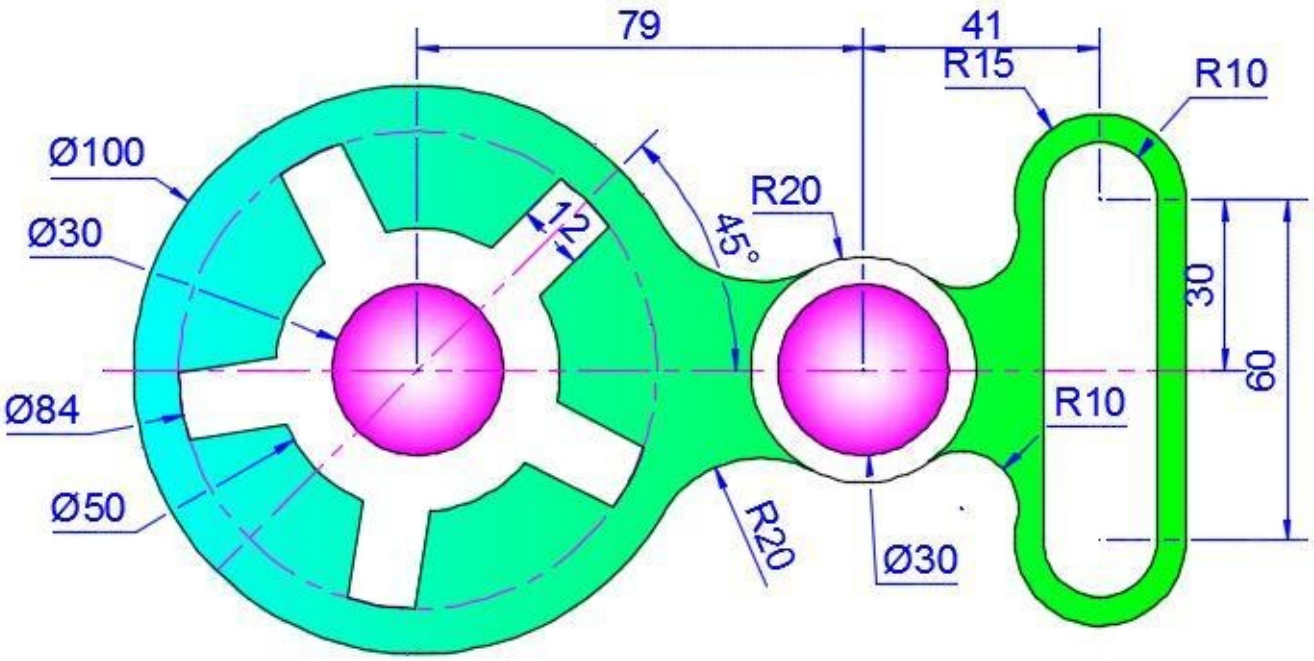
79
41
R15
R10
Ø100
Ø30
12
45°
R20
30
60
Ø84
R10
Ø50
R20
Ø30

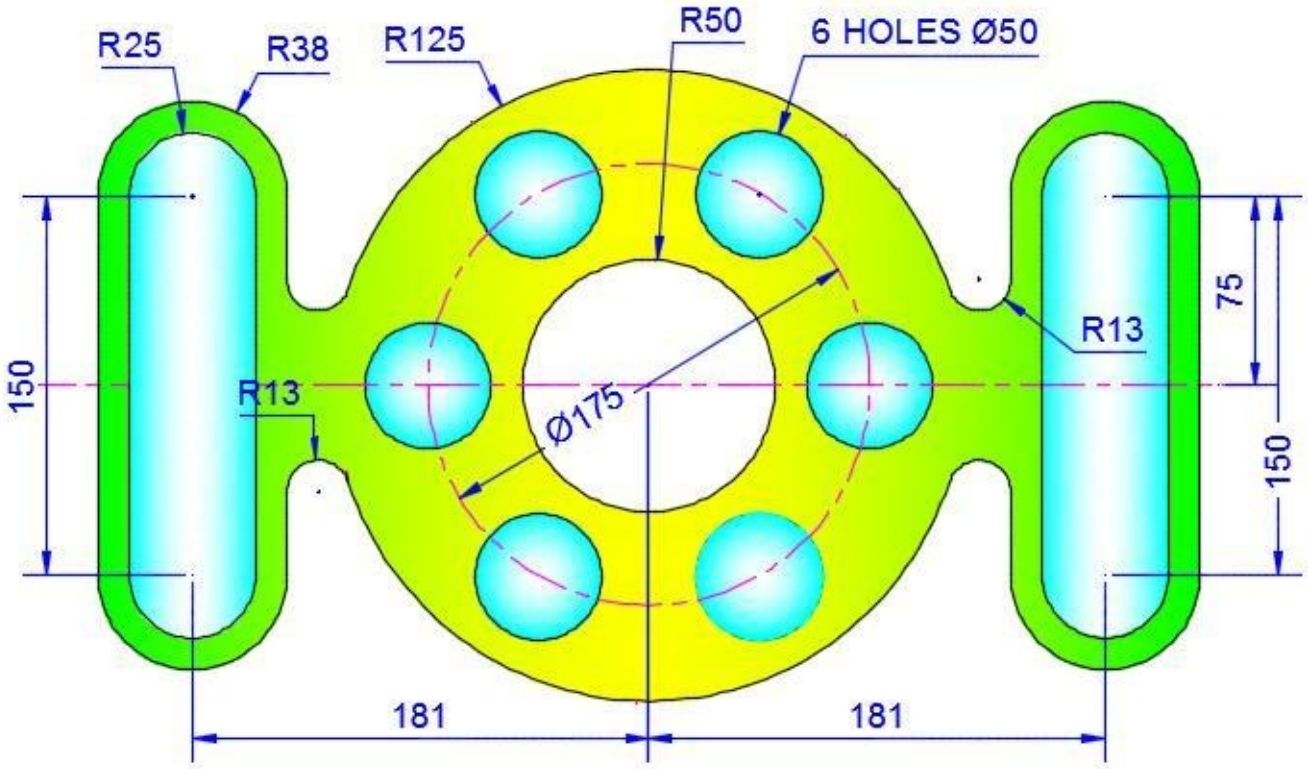
R25
R38
R125
R50
6 HOLES Ø50
R13
R13
Ø175
150
75
150
181
181

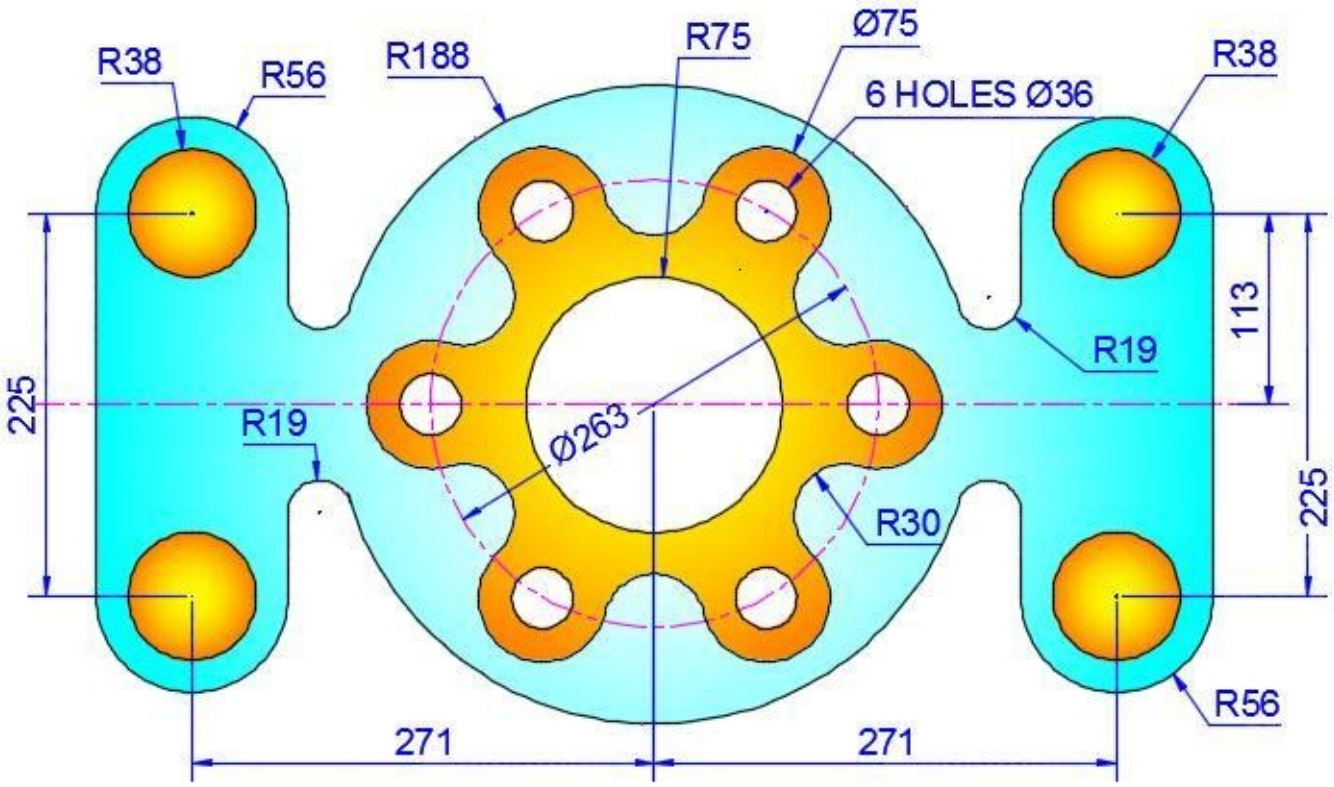
R38
R56
R188
R75
Ø75
6 HOLES Ø36
R38
113
R19
225
R19
Ø263
R30
225
R56
271
271

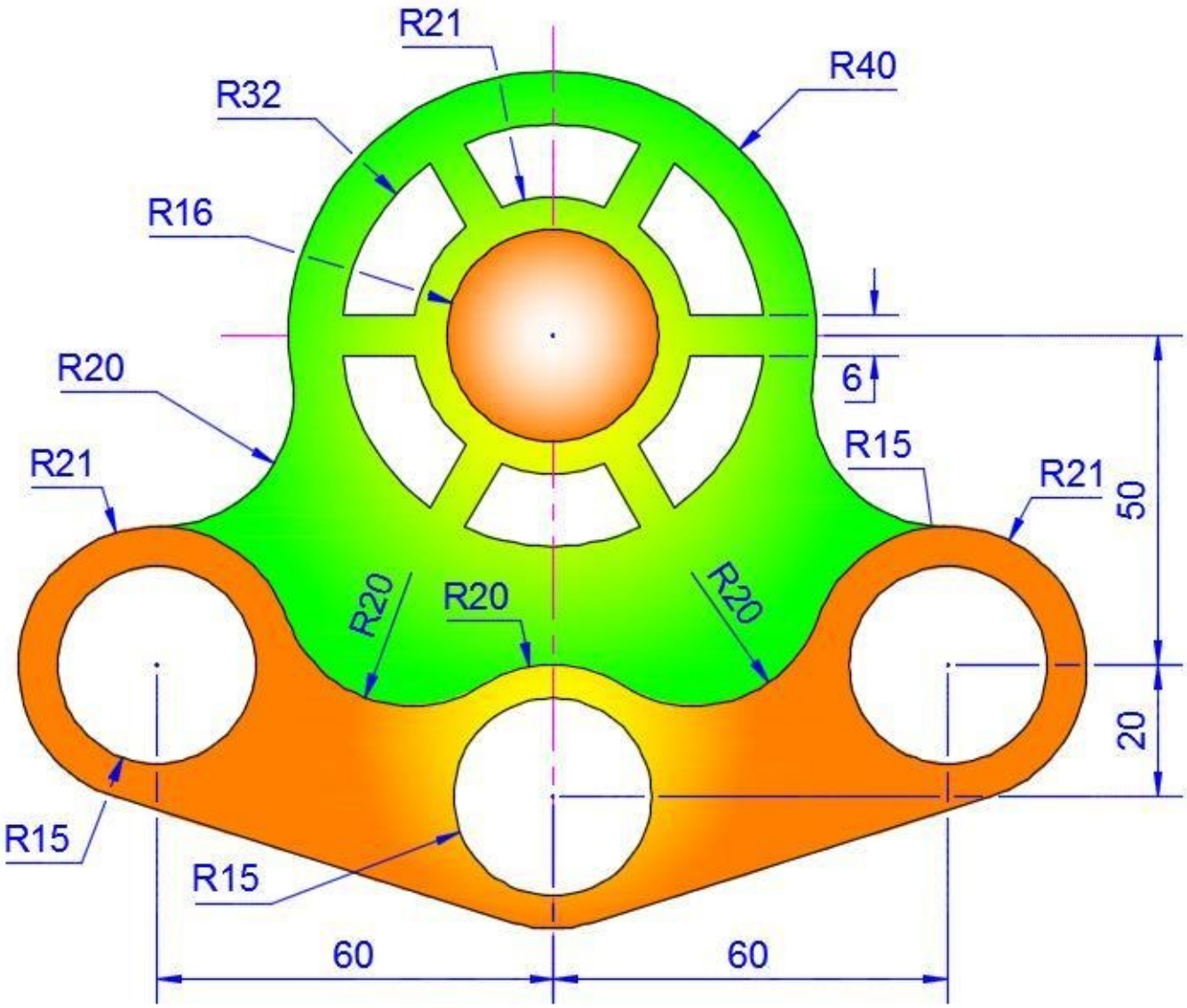
R21
R40
R32
R16
6
R20
R21
R15
R21
50
R20
R20
R20
20
R15
R15
60
60

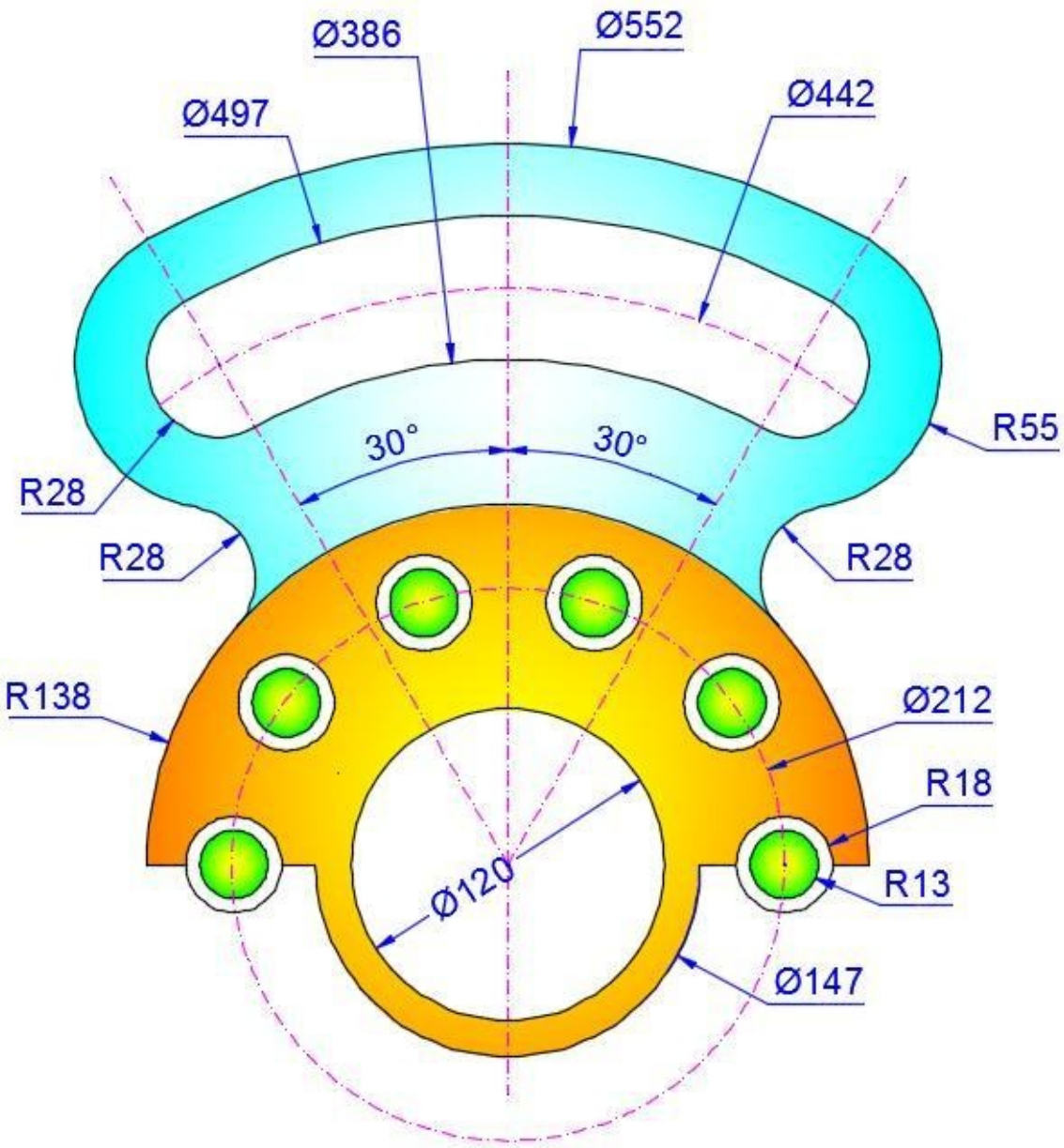
Ø386
Ø552
Ø497
Ø442
30°
30°
R55
R28
R28
R28
R138
Ø212
R18
R13
Ø120
Ø147

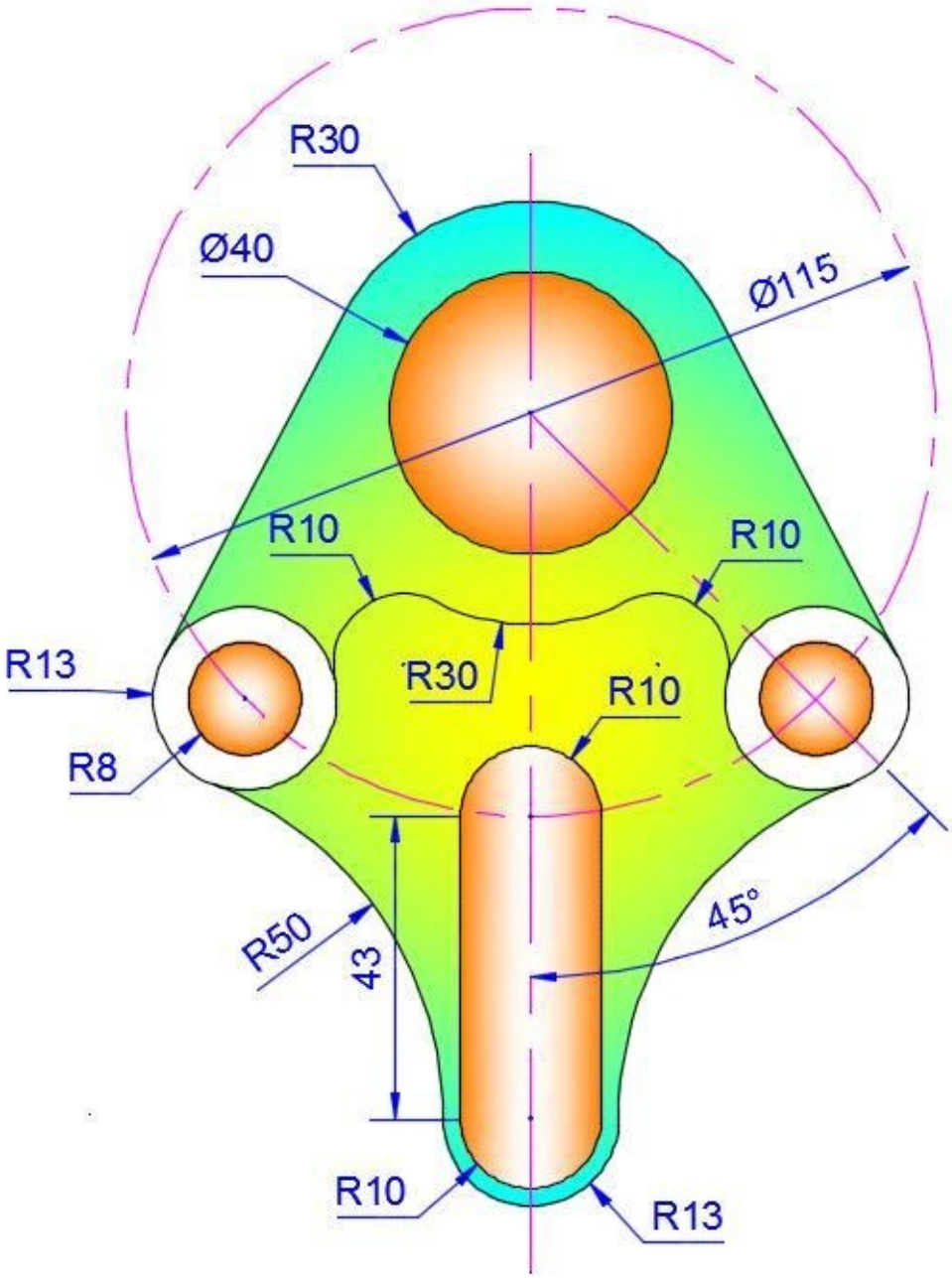
R30
Ø40
Ø115
R10
R10
R13
R30
R10
R8
R50
43
45°
R10
R13

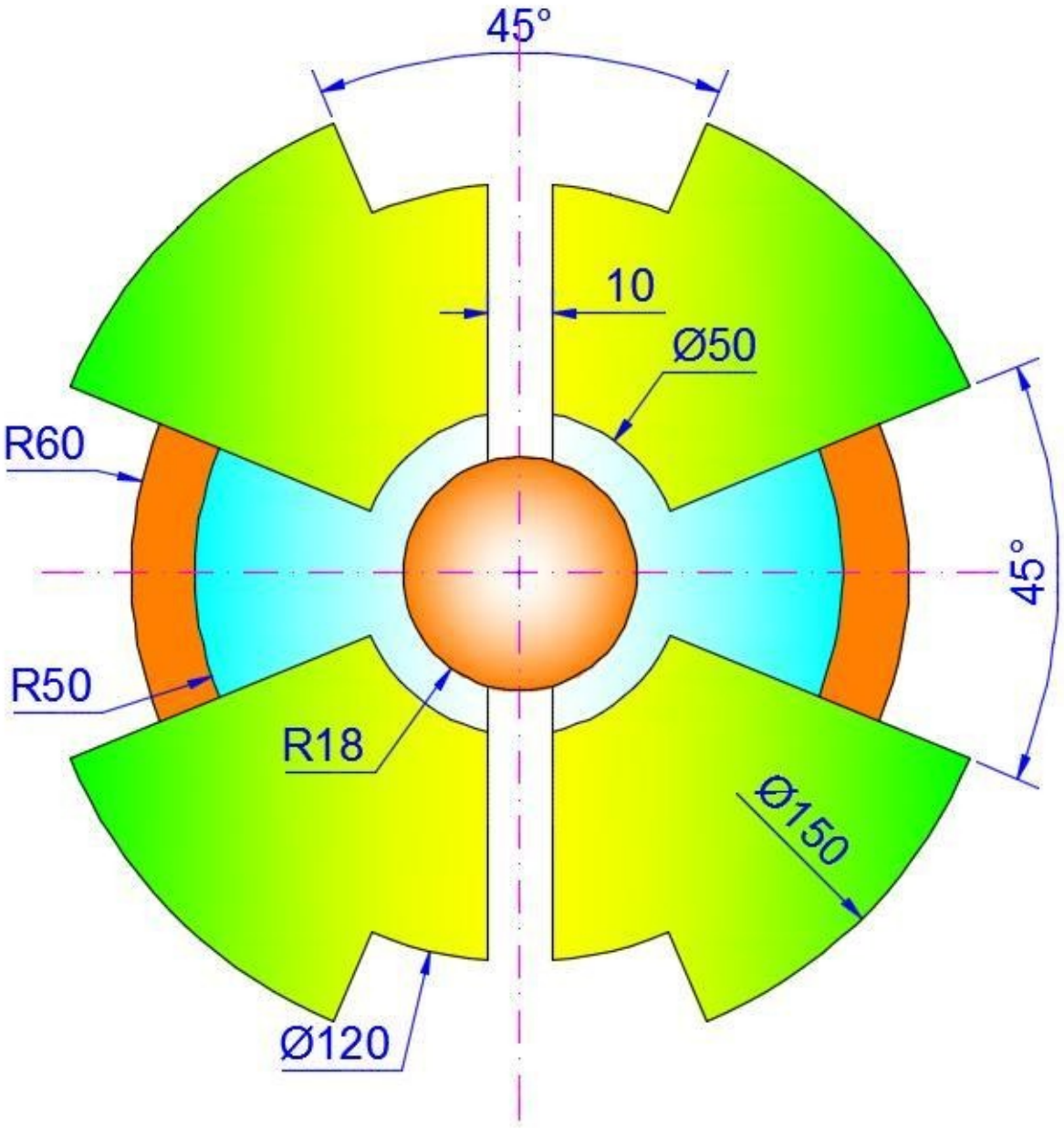
45°
10
Ø50
R60
45°
R50
R18
Ø150
Ø120

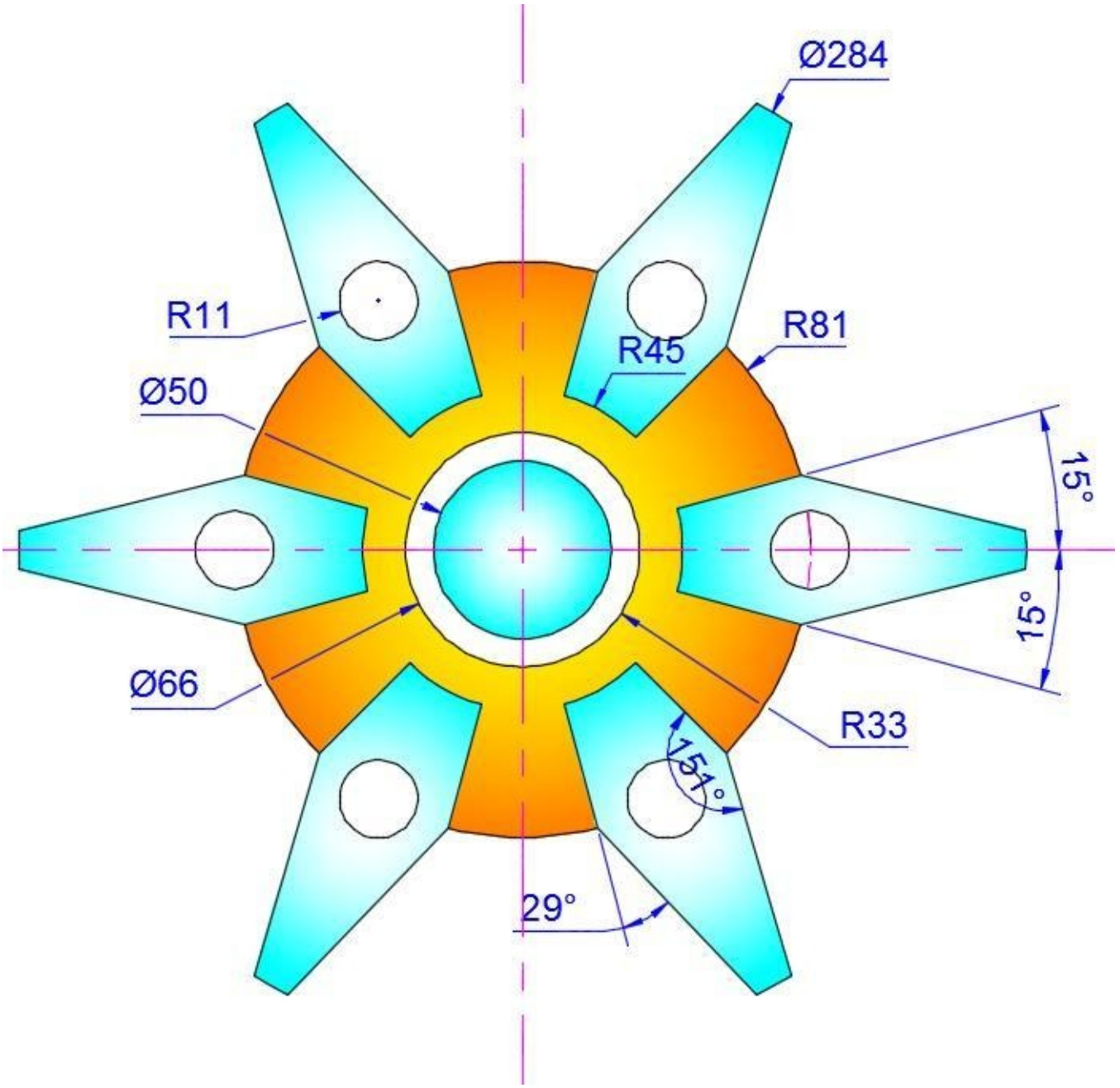
Ø284
R11
R81
R45
Ø50
15°
15°
Ø66
R33
151°
29°

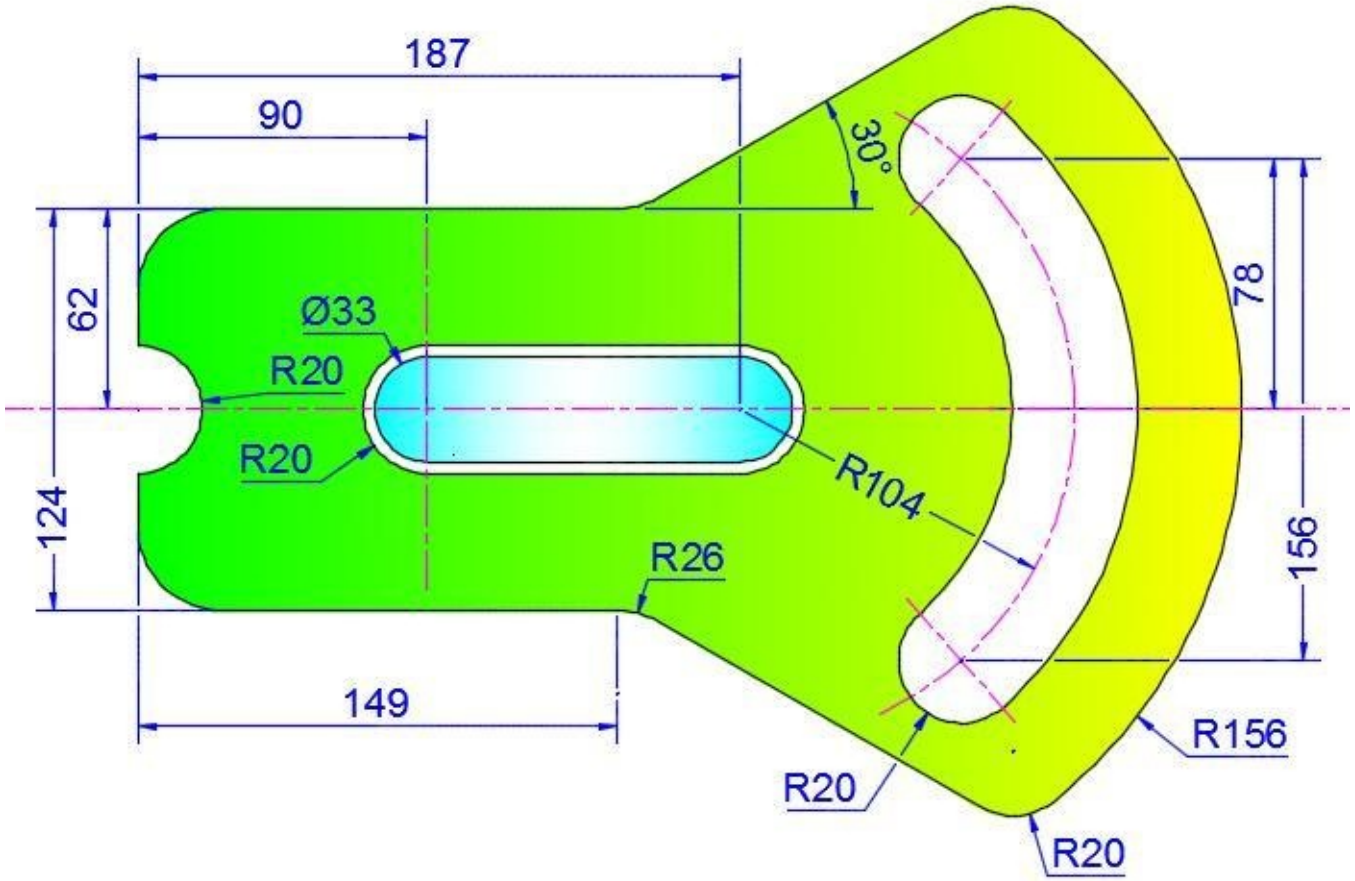
187
90
30°
62
Ø33
R20
R20
124
R104
R26
78
156
149
R156
R20
R20

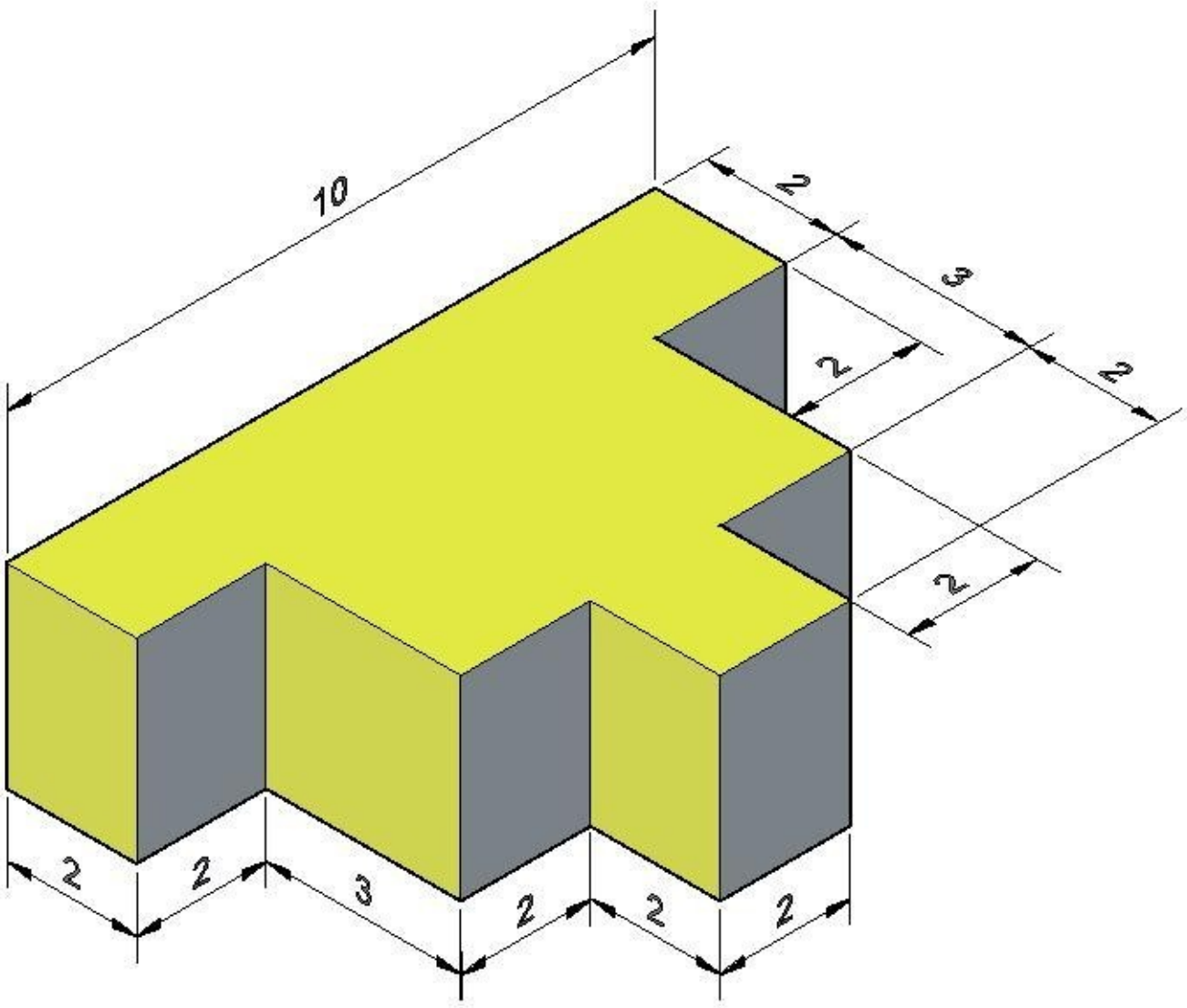
10
2
3
2
2
2
2
2
3
2
2
2

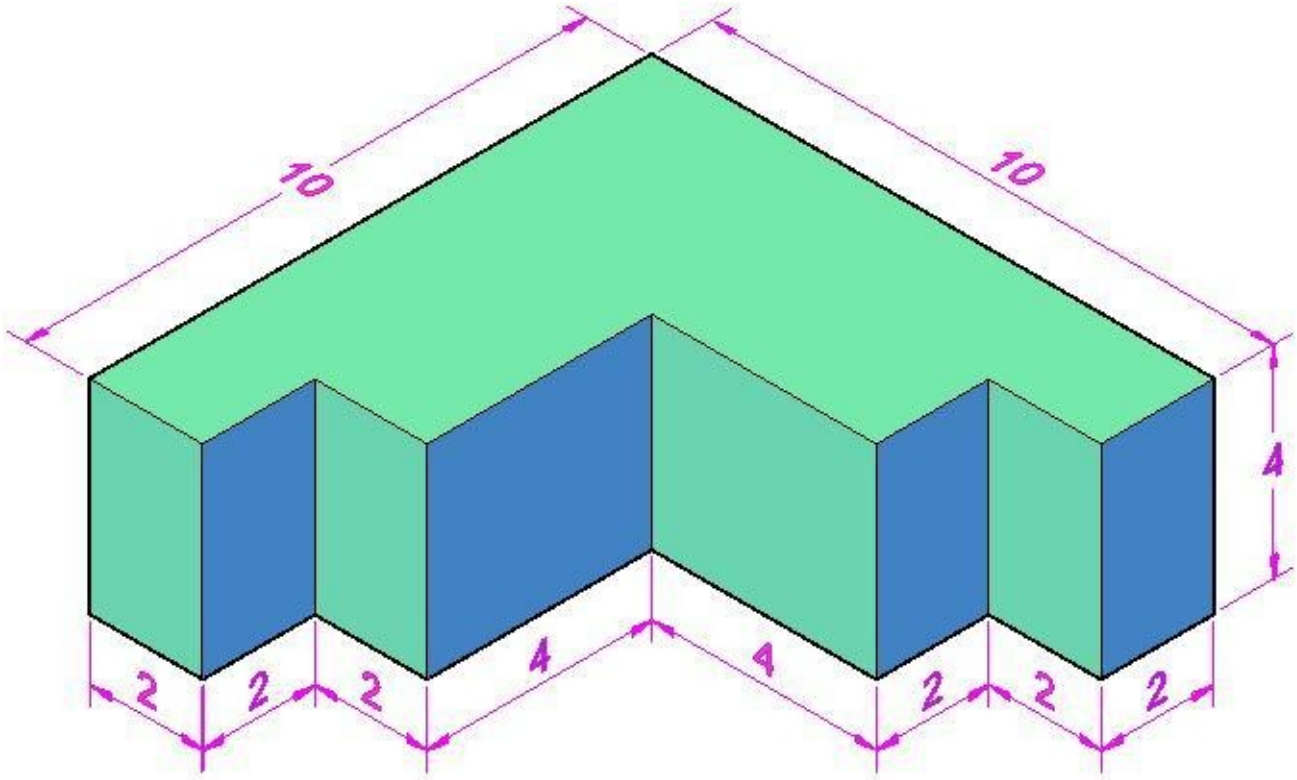
10
10
4
2
2
2
4
4
2
2
2

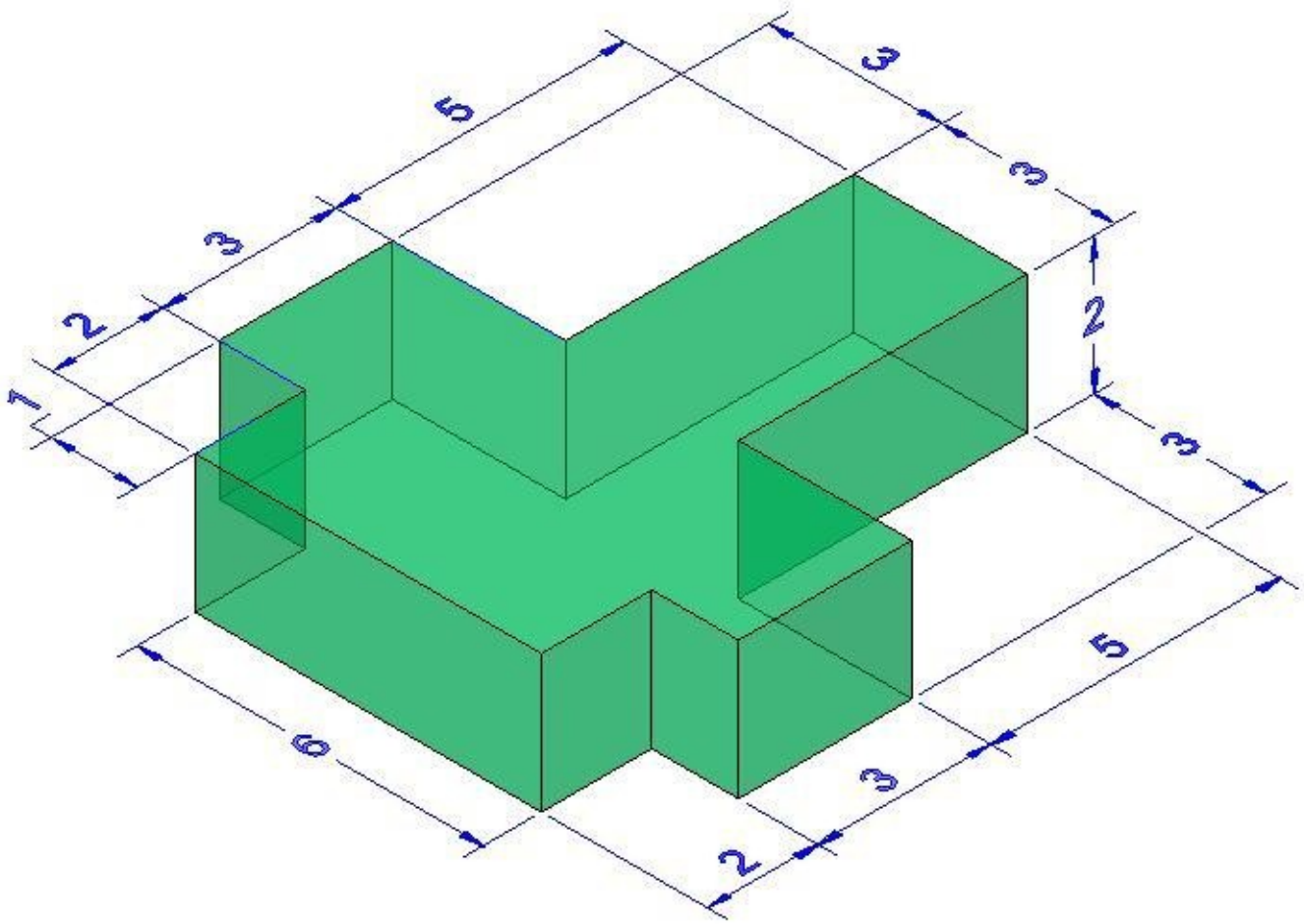
5
3
3
2
1
2
3
5
6
3
2

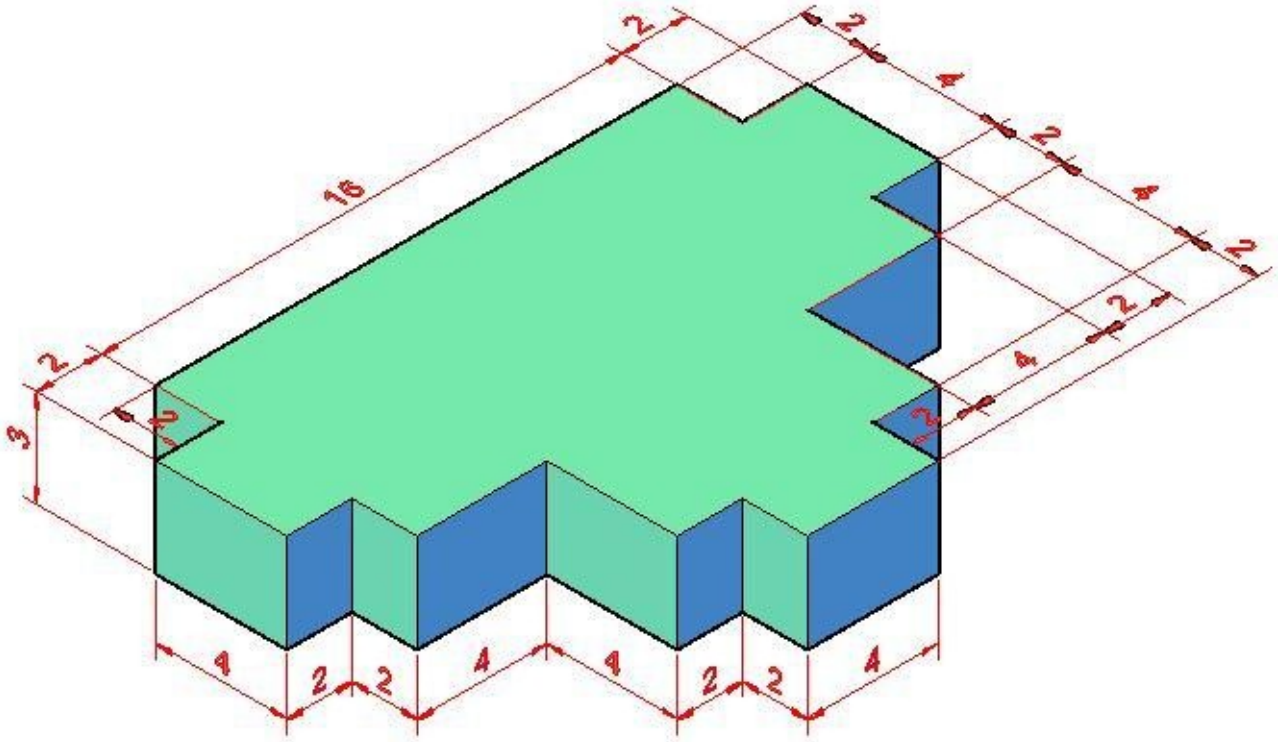

16
2
2
4
2
4
2
2
4
2
2
3
2
4
2
2
4
4
2
2
4

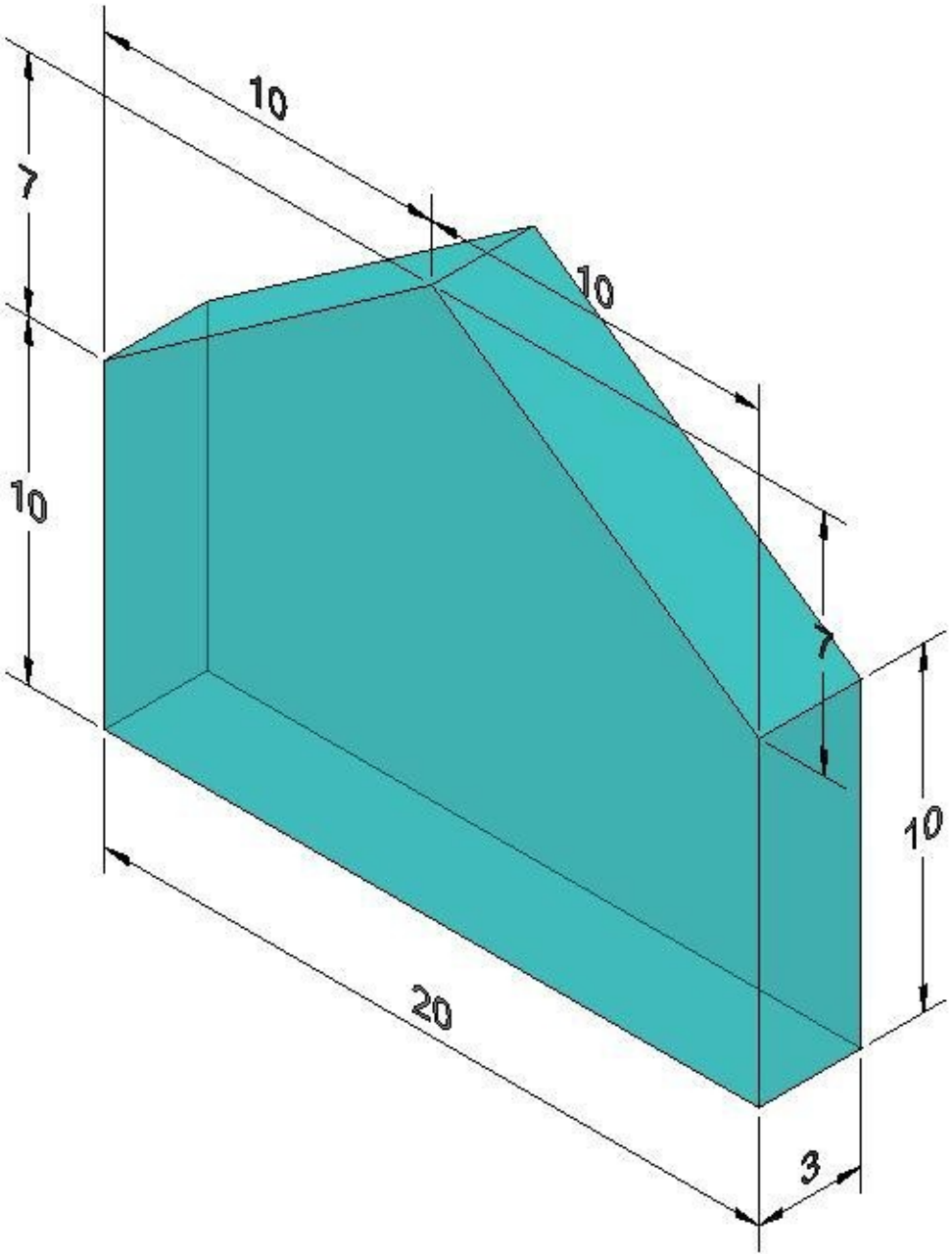
10
7
10
10
7
10
20
3

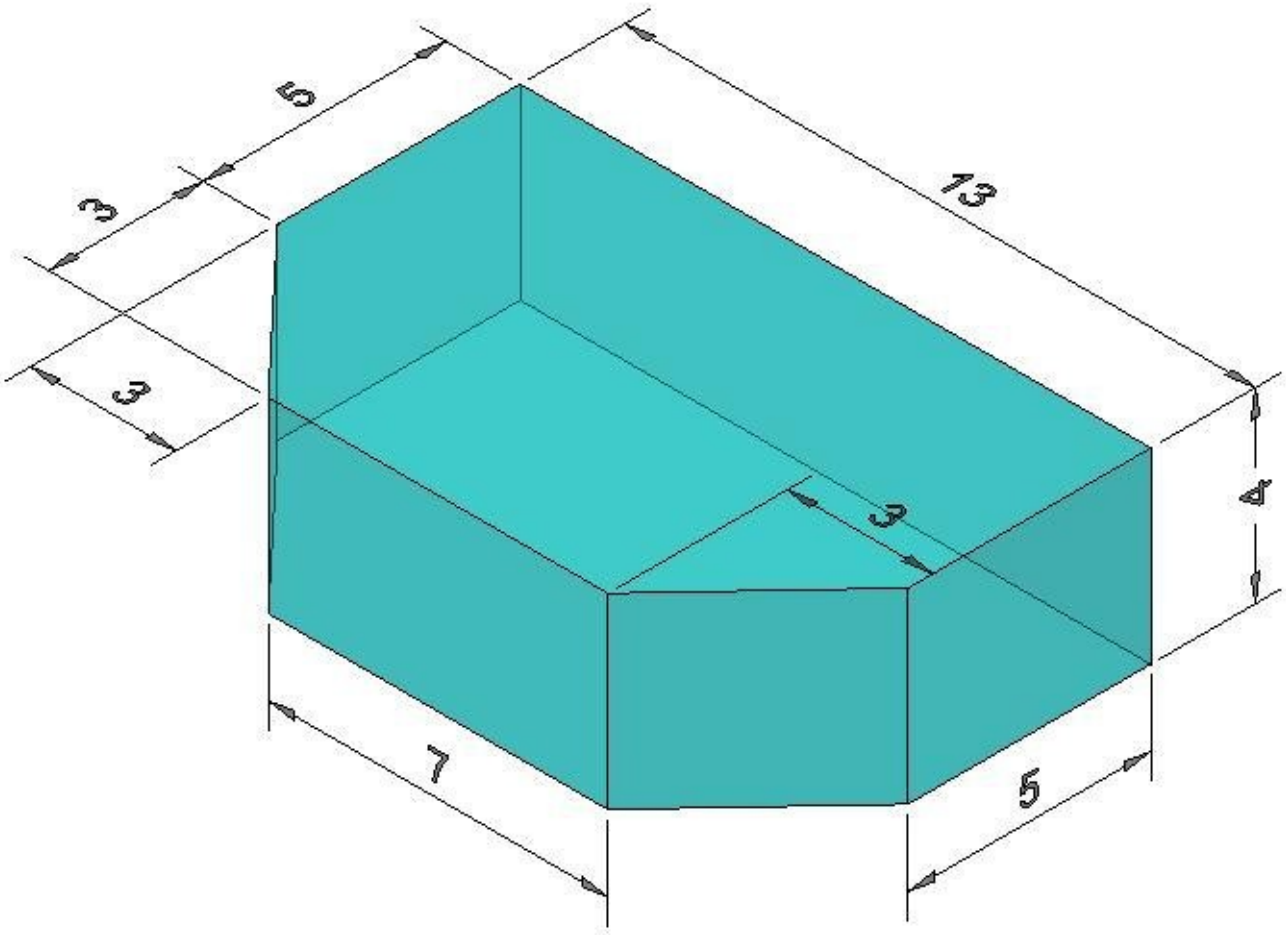
5
3
13
3
3
4
7
5

es]

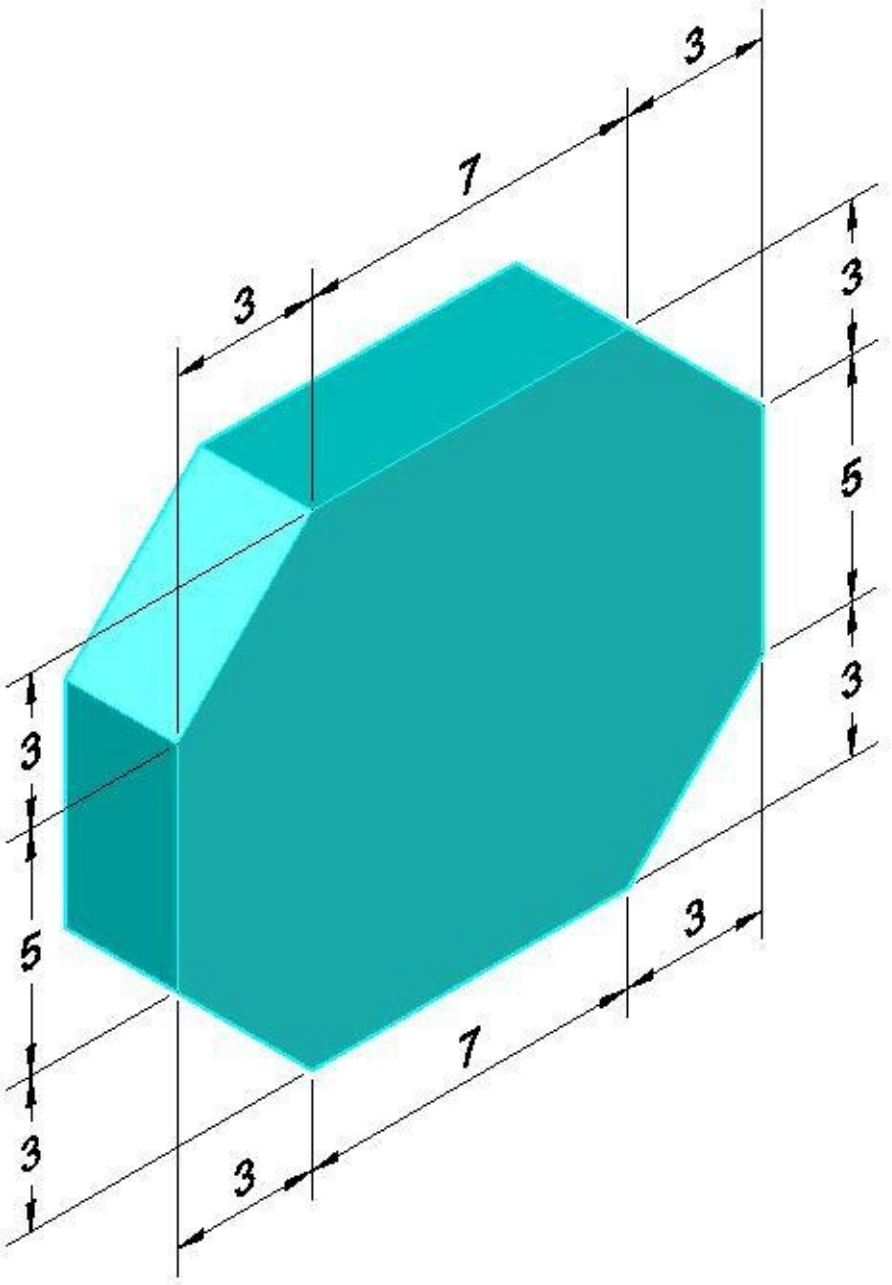

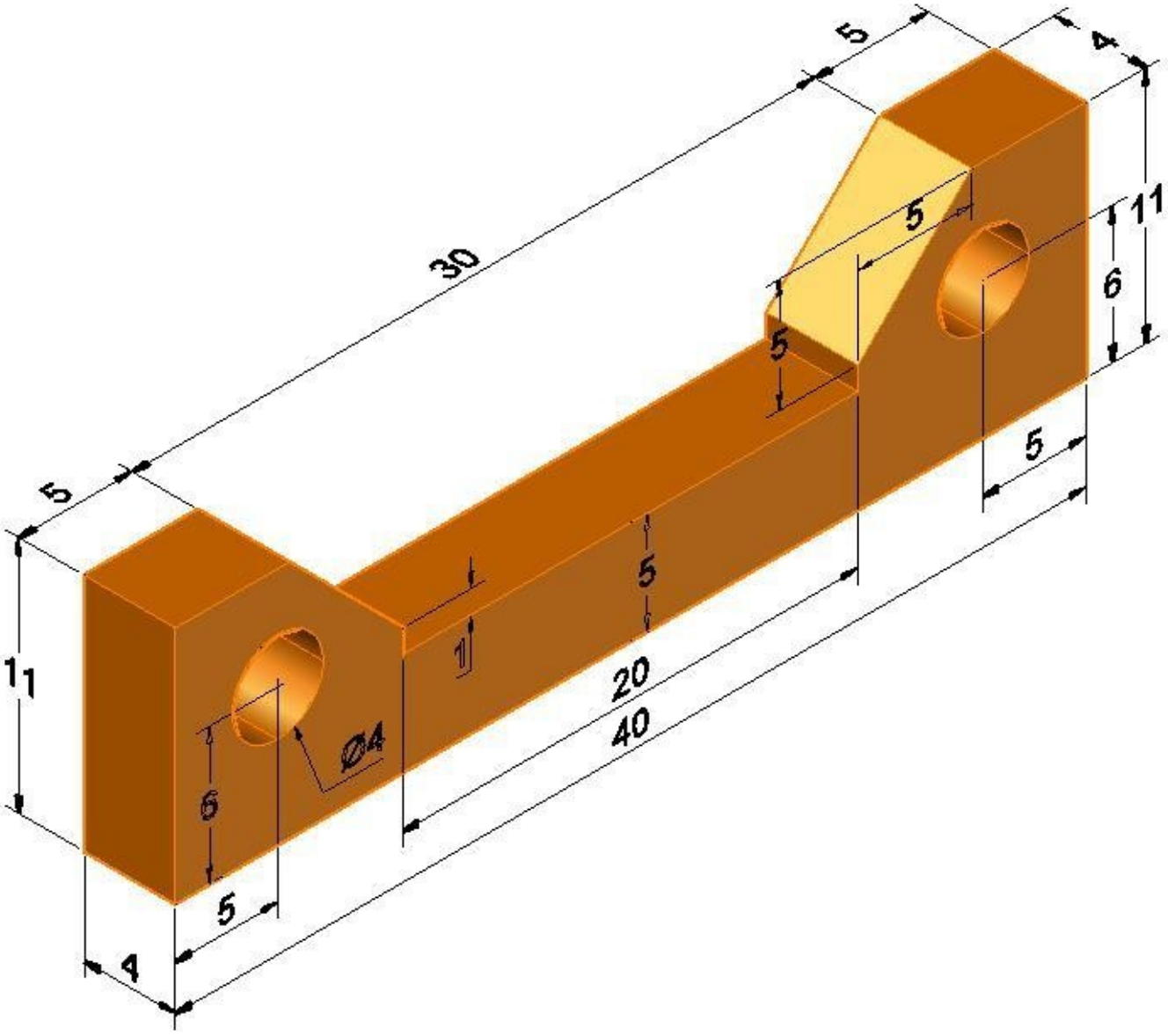
5
4
30
5
11
5
6
5
5
11
5
1
20
40
Ø4
6
5
4

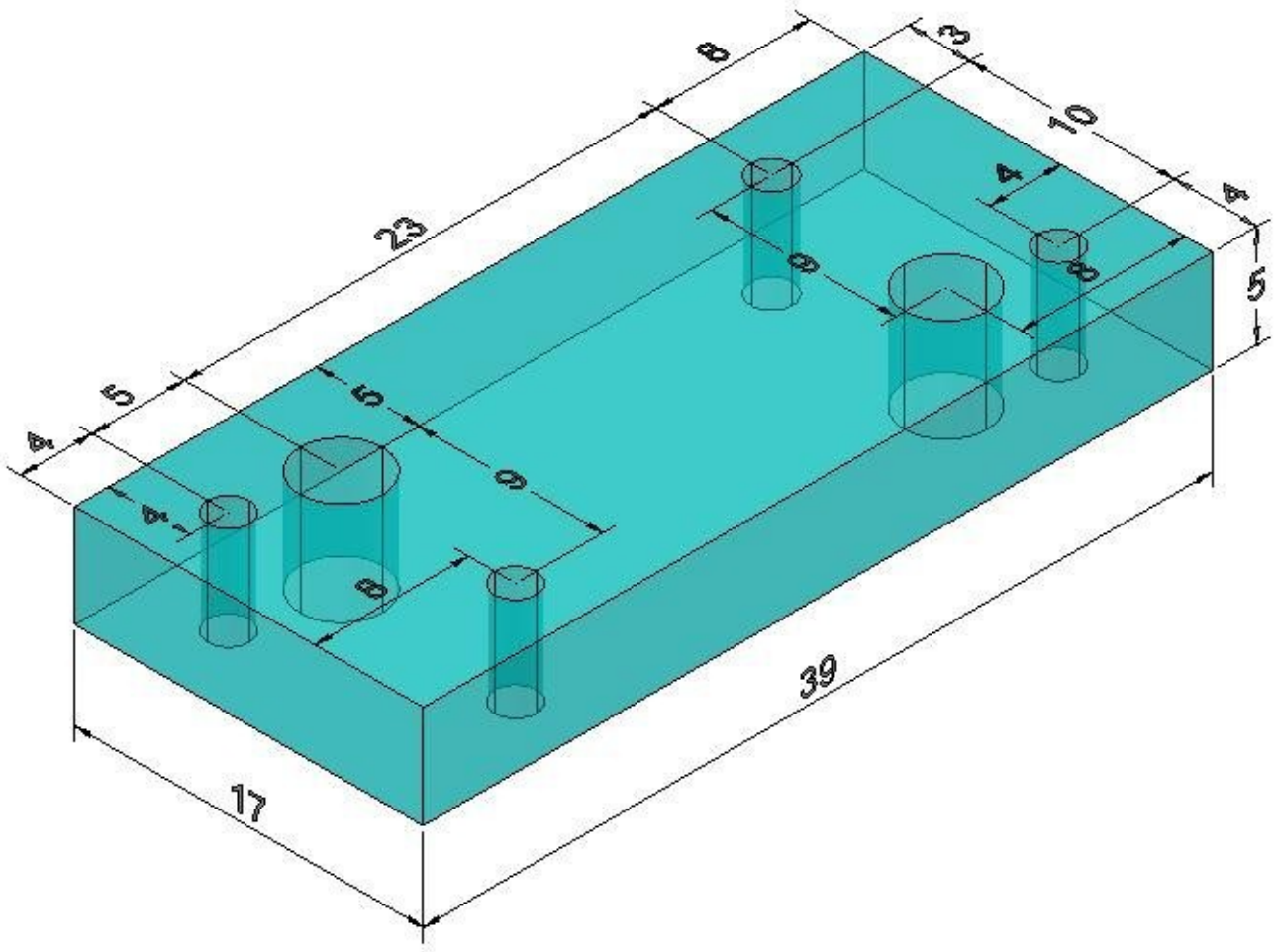
8
3
10
4
23
4
5
5
5
9
4
4
9
8
8
39
17

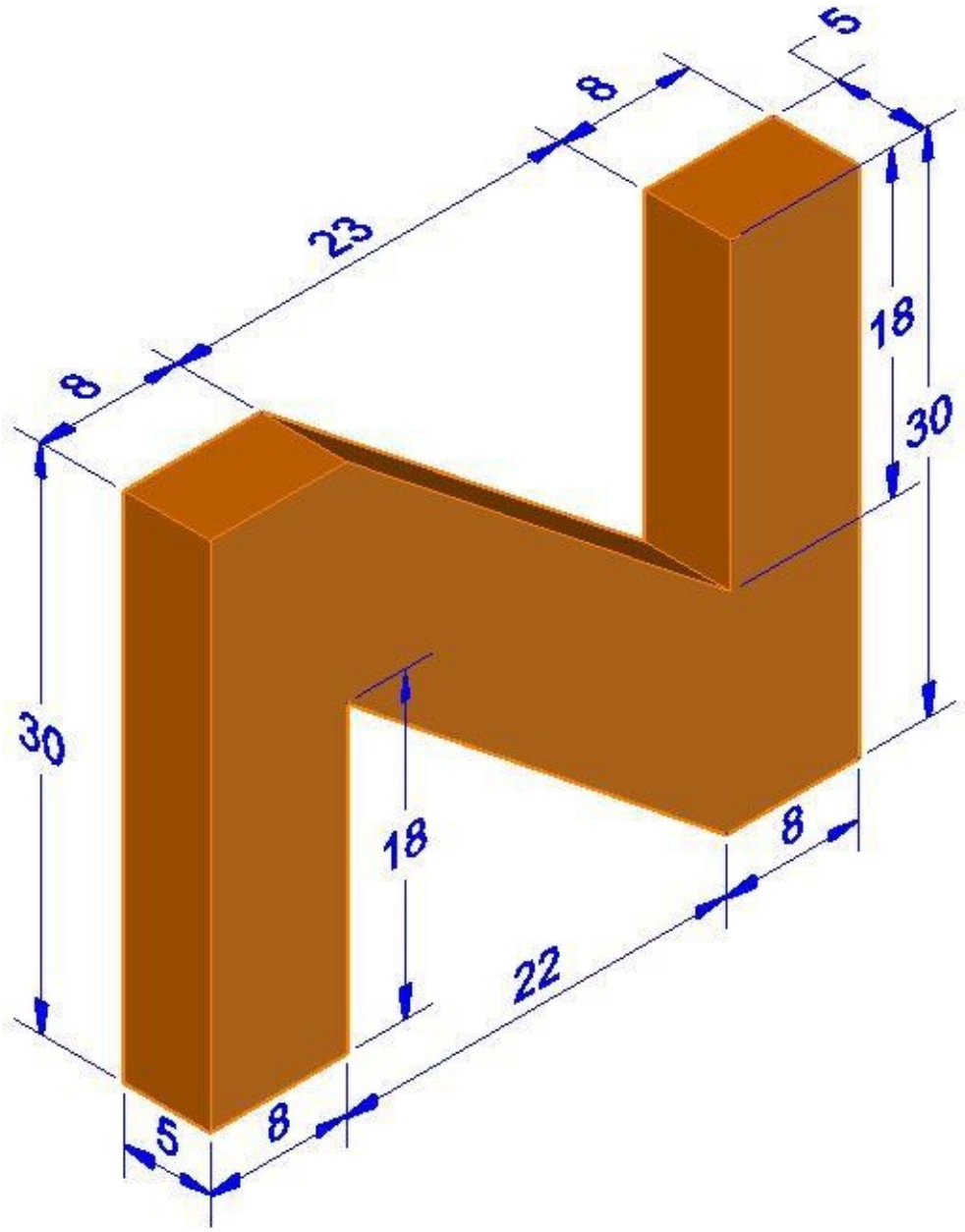
5
8
23
8
18
30
30
18
8
22
5
8

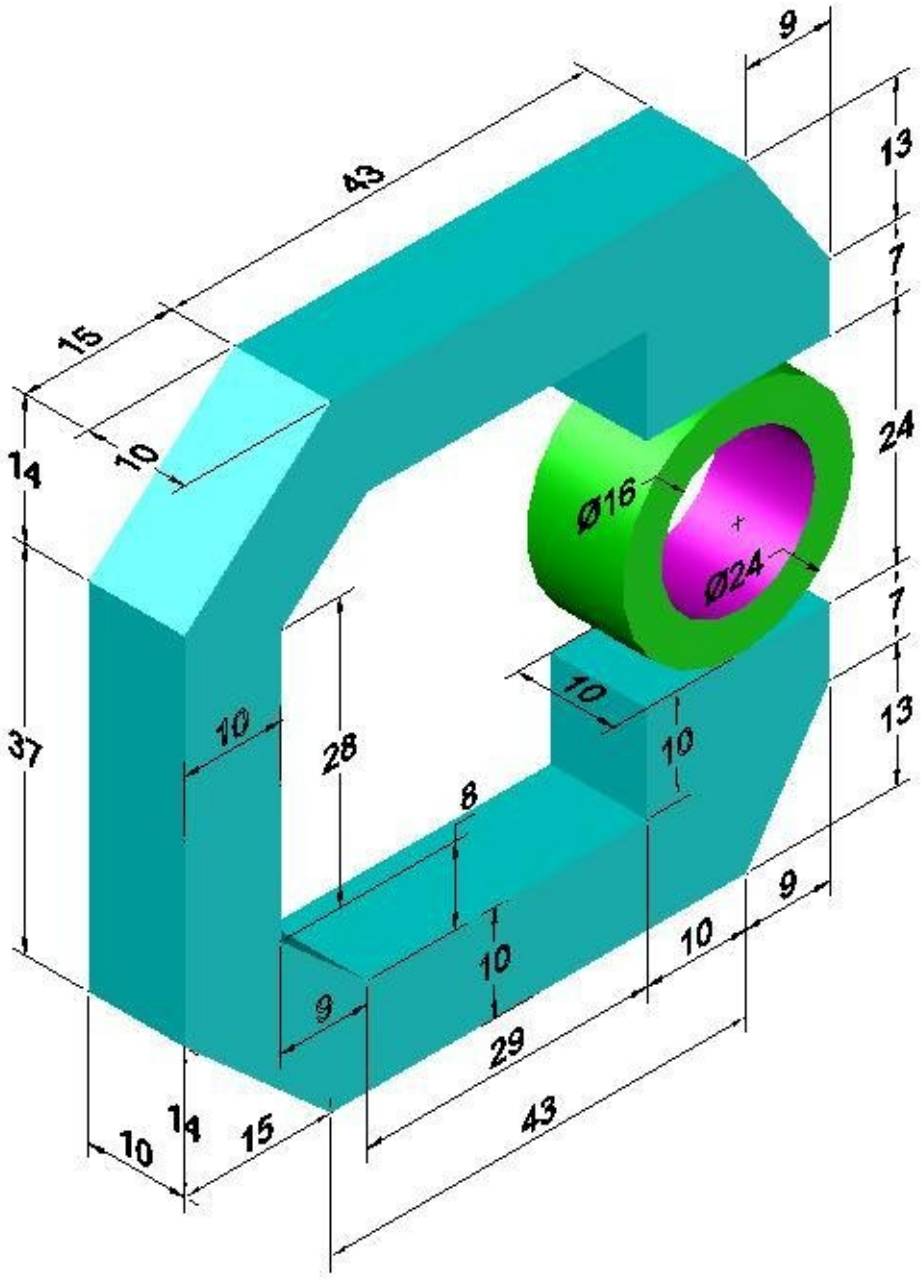
9
43
13
15
7
10
14
24
Ø16
Ø24
7
10
37
10
28
10
13
8
9
10
10
9
29
10
14
15
43

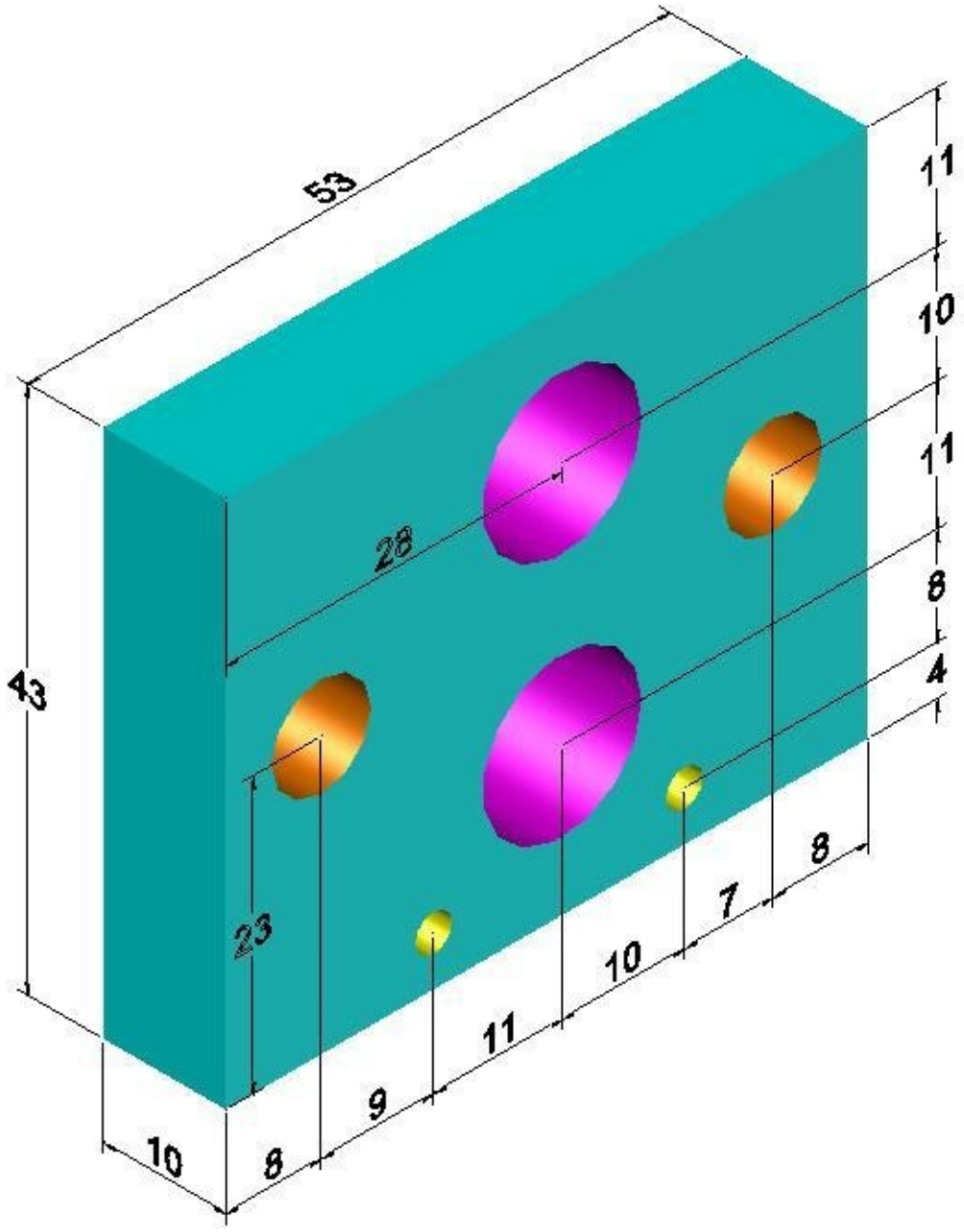
53
43
28
23
10
8
9
11
10
7
8
11
10
11
8
4

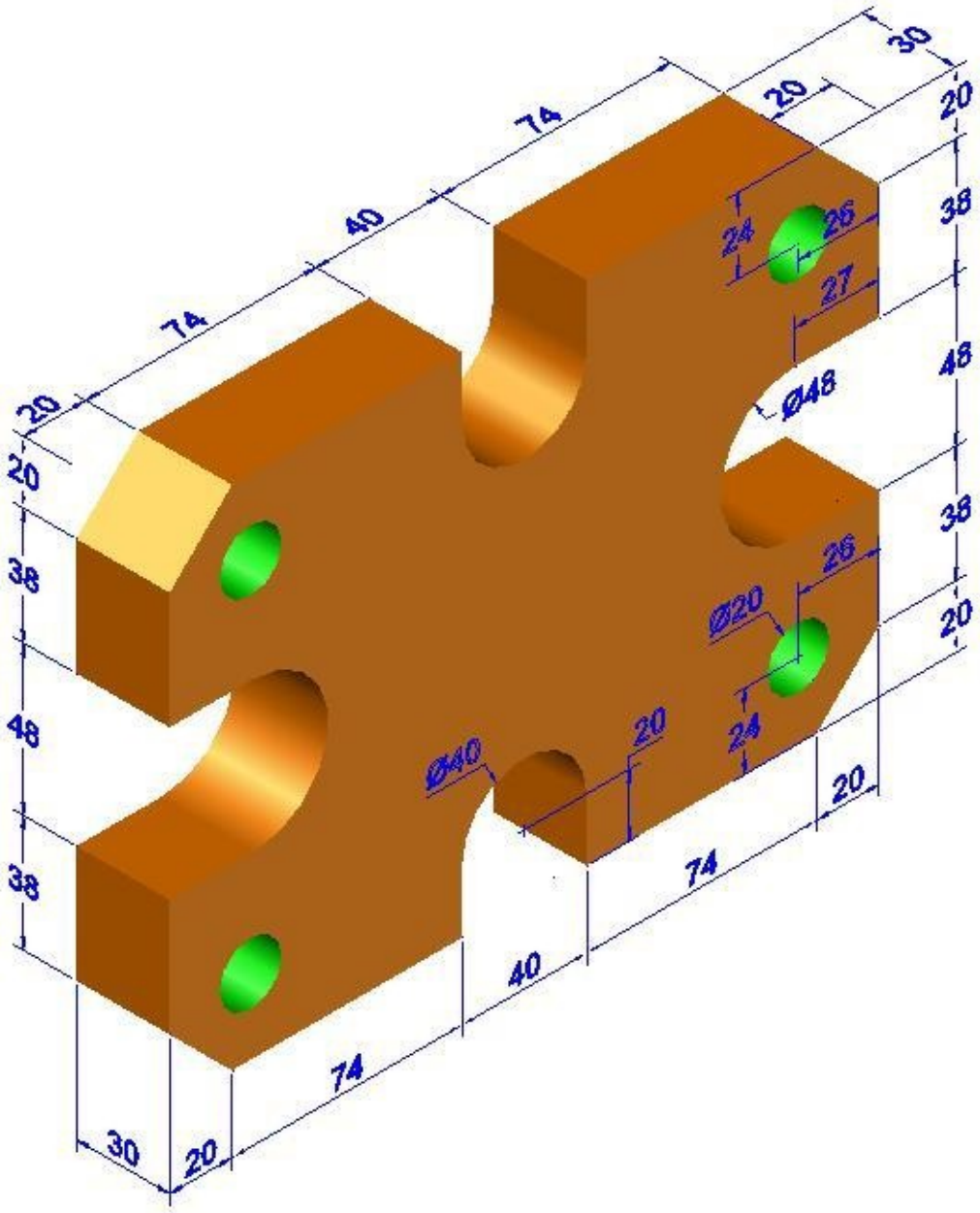

30
20
20
74
40
74
20
20
38
48
38
24
26
27
Ø48
26
Ø20
24
20
Ø40
20
38
48
38
20
74
40
74
30
20

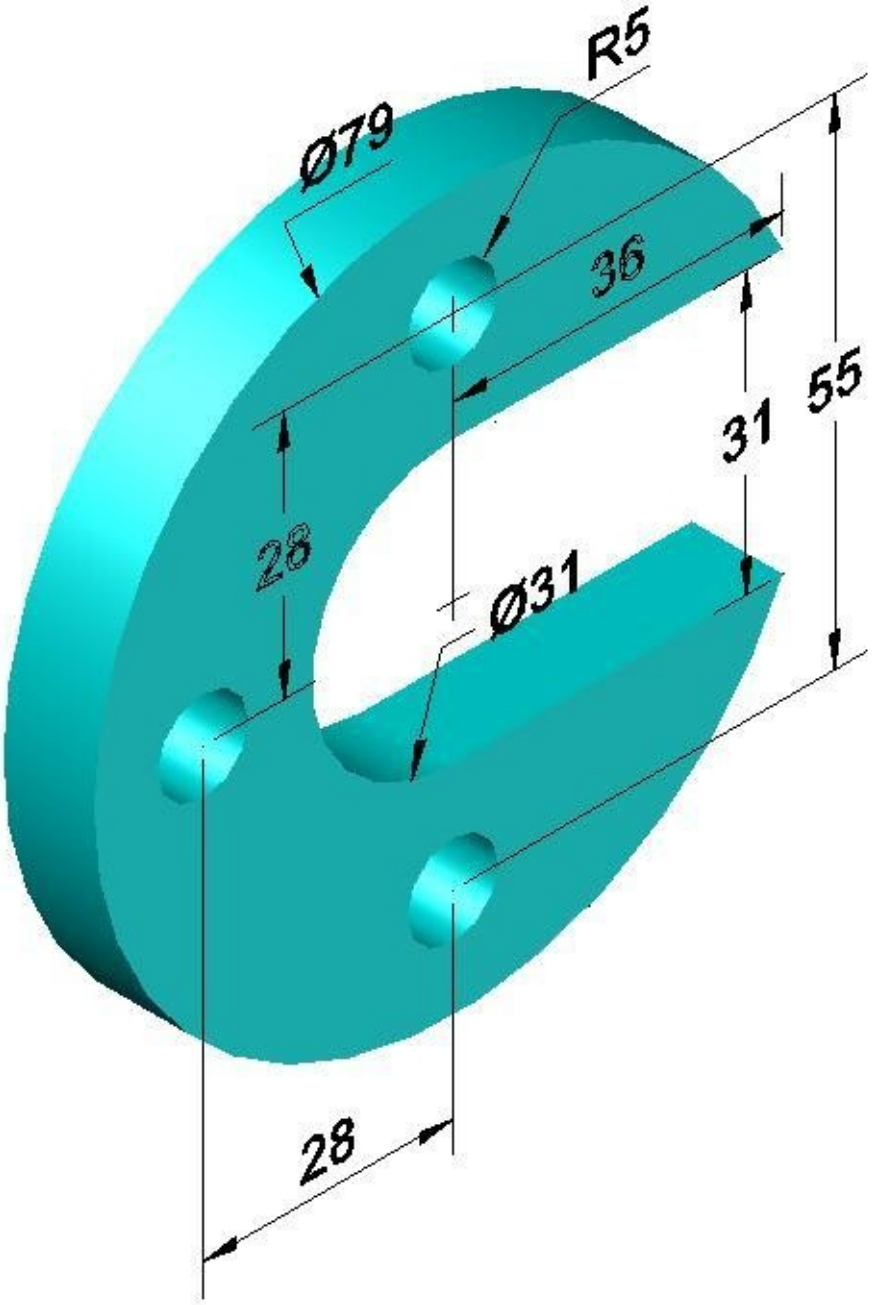
R5
Ø79
36
55
31
28
Ø31
28

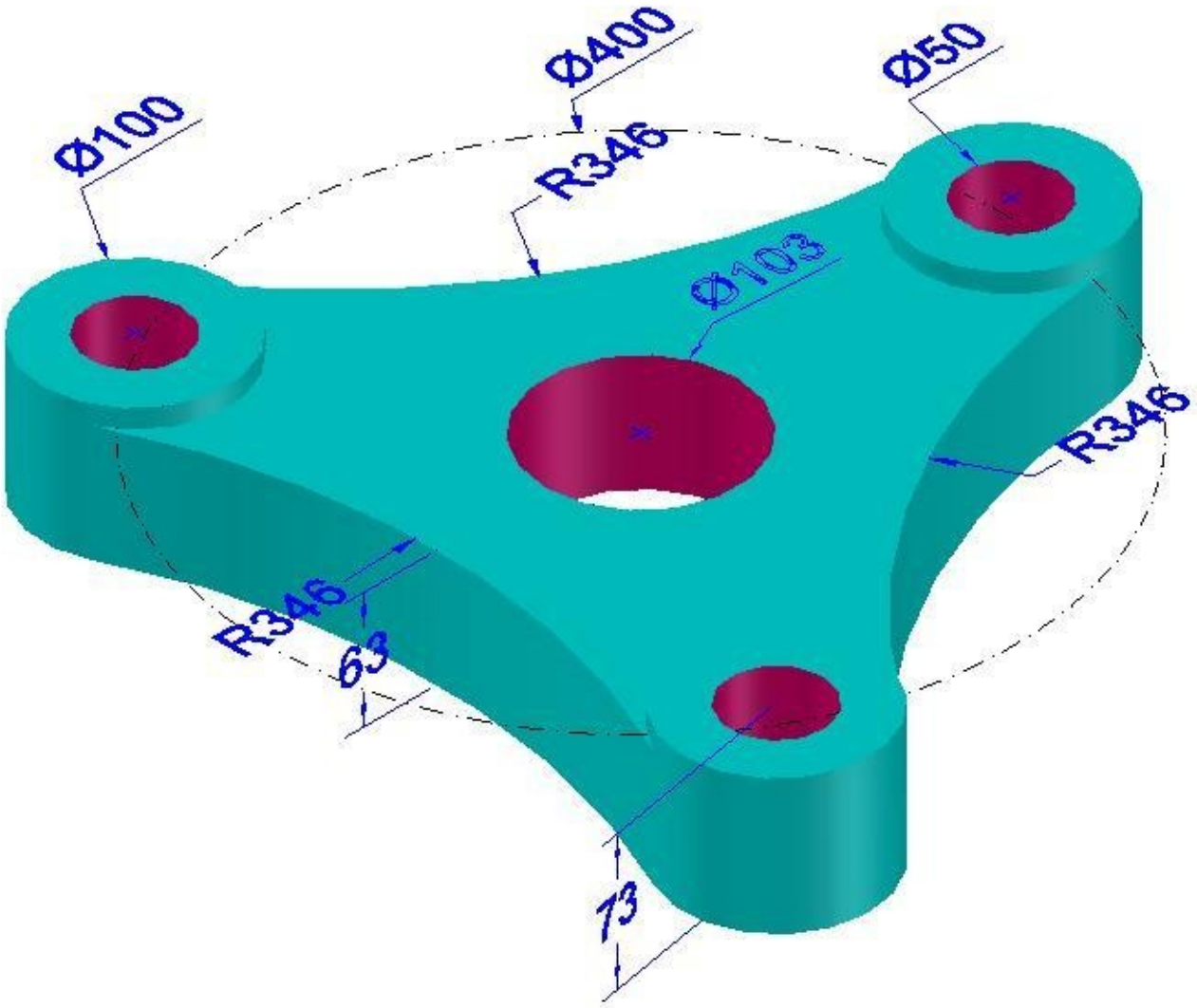
Ø400
Ø50
Ø100
R346
Ø103
R346
R346
63
73

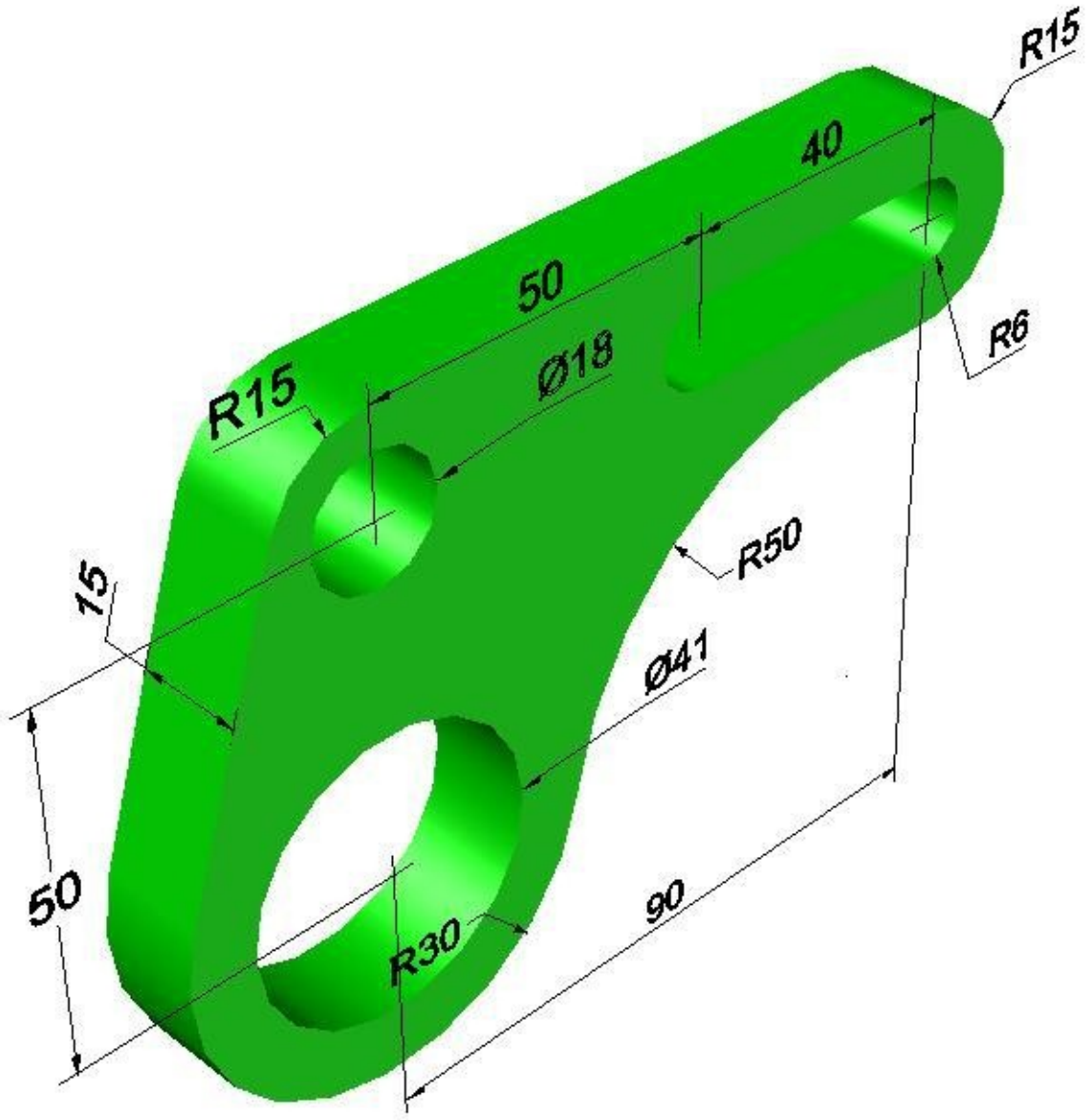
R15
40
50
R15
Ø18
R6
R50
15
Ø41
50
R30
90

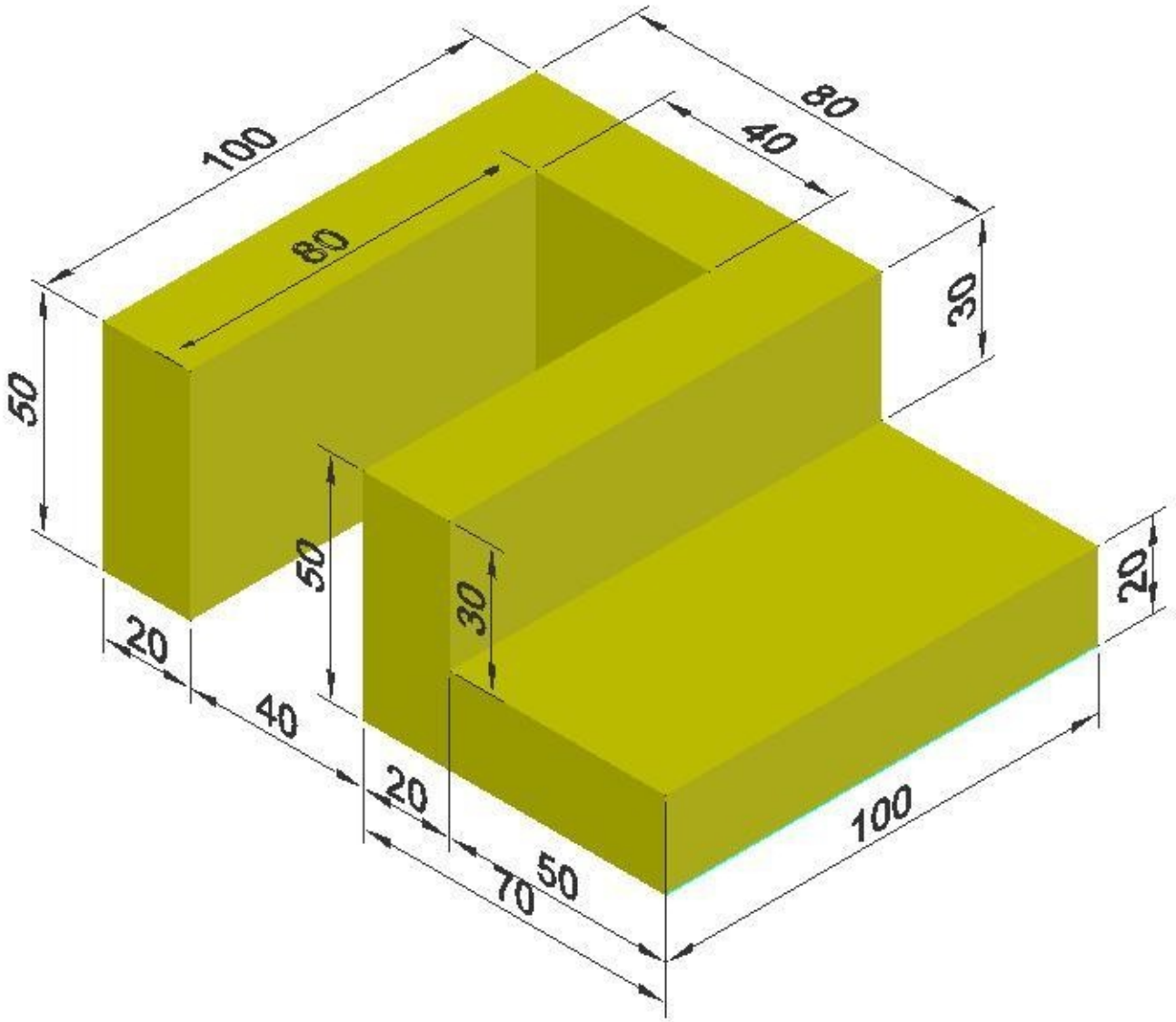
100
80
40
80
30
50
50
30
20
20
40
20
50
70
100

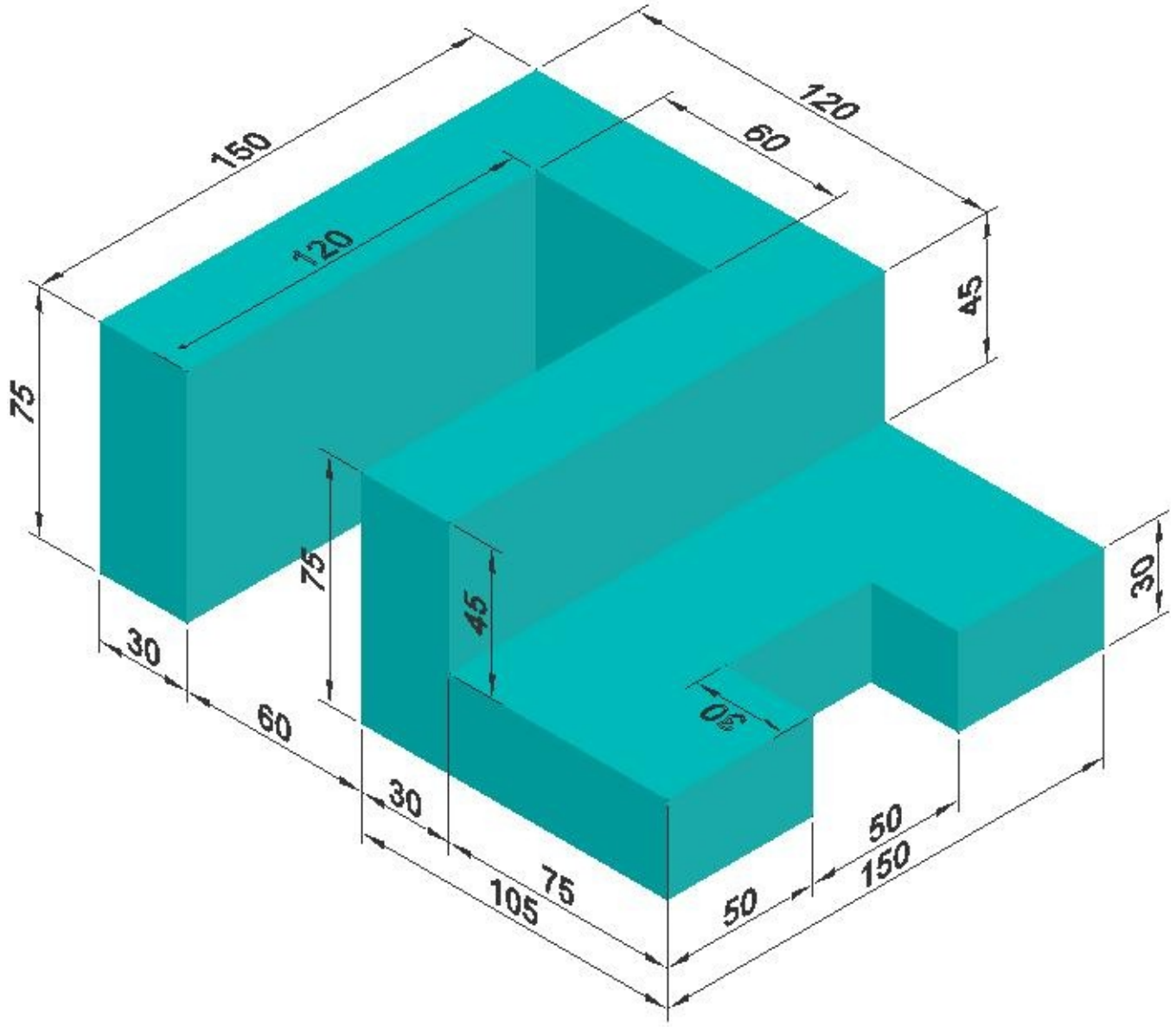
150
120
60
120
45
75
75
45
30
30
60
30
75
105
50
50
150

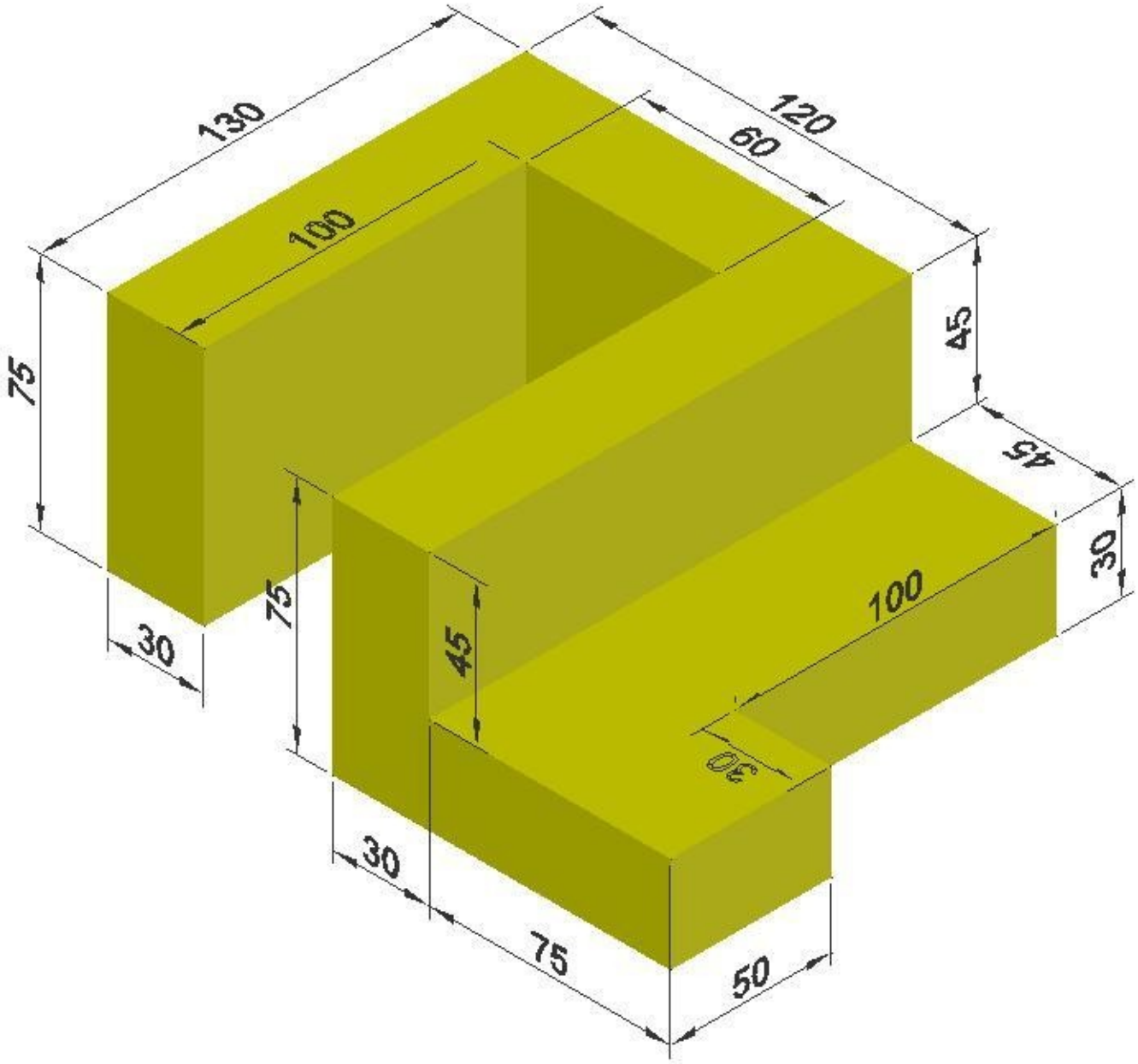
130
120
60
100
75
45
45
30
100
75
45
30
30
30
75
50

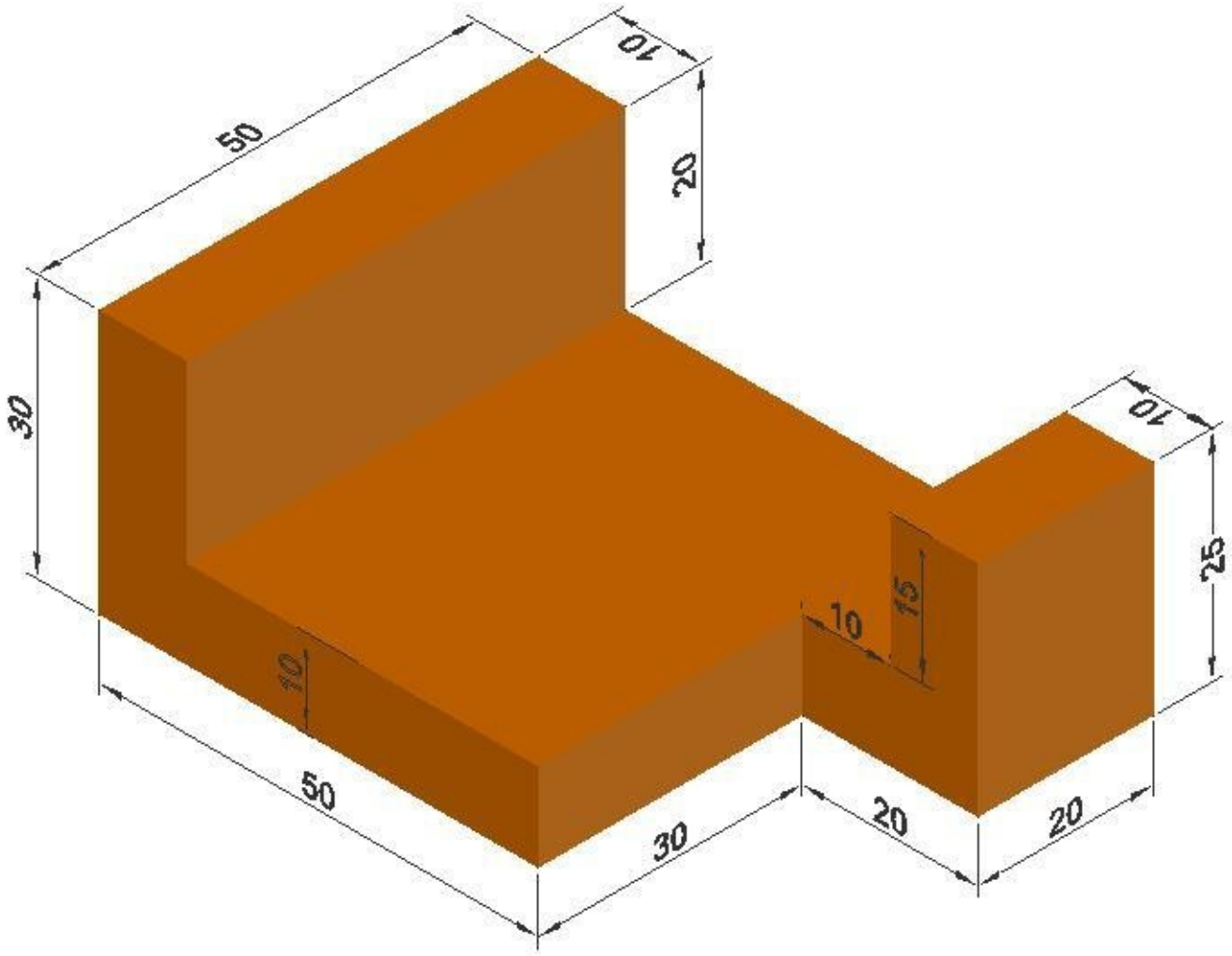
50
10
20
30
10
25
15
10
10
50
30
20
20

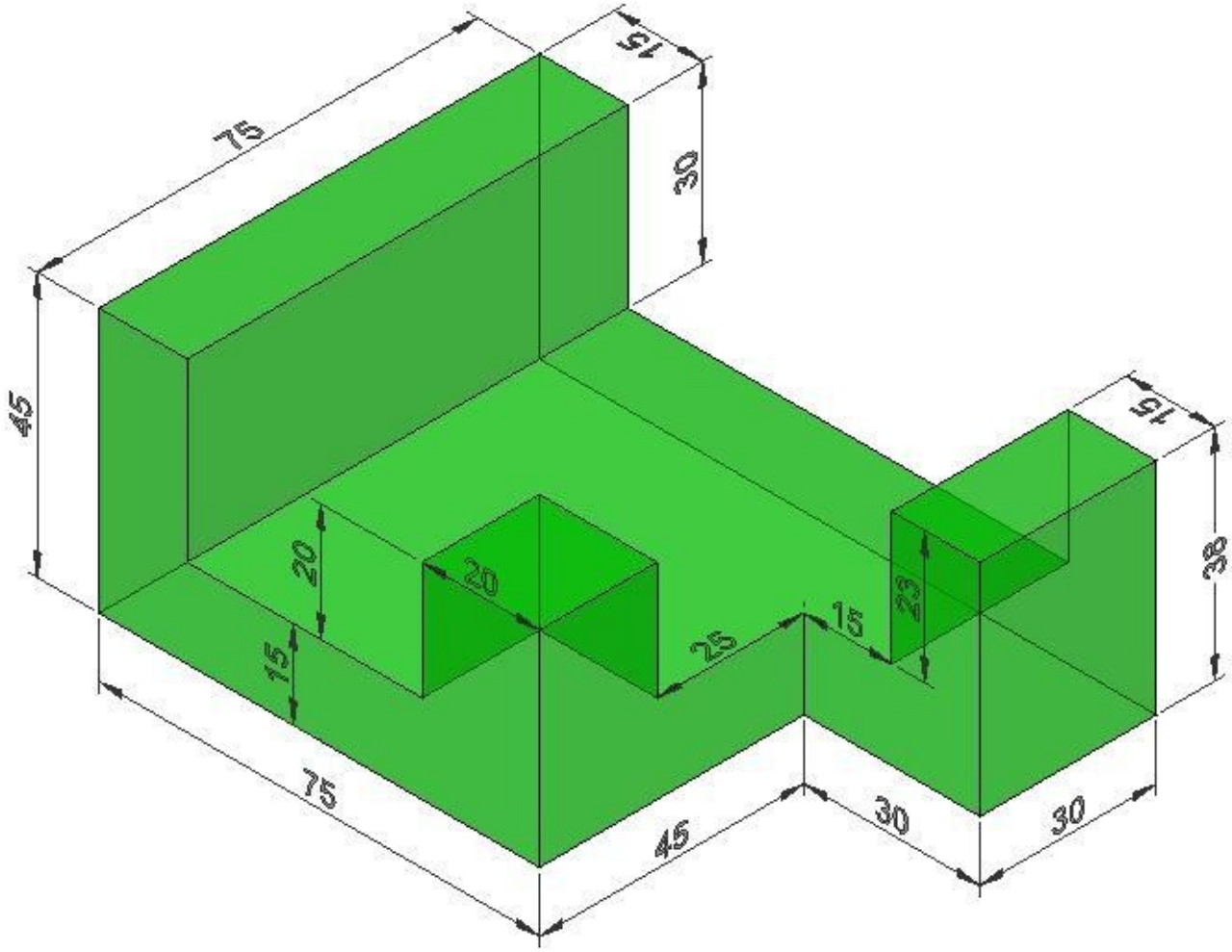
75
15
30
45
20
20
15
25
15
23
15
38
75
45
30
30

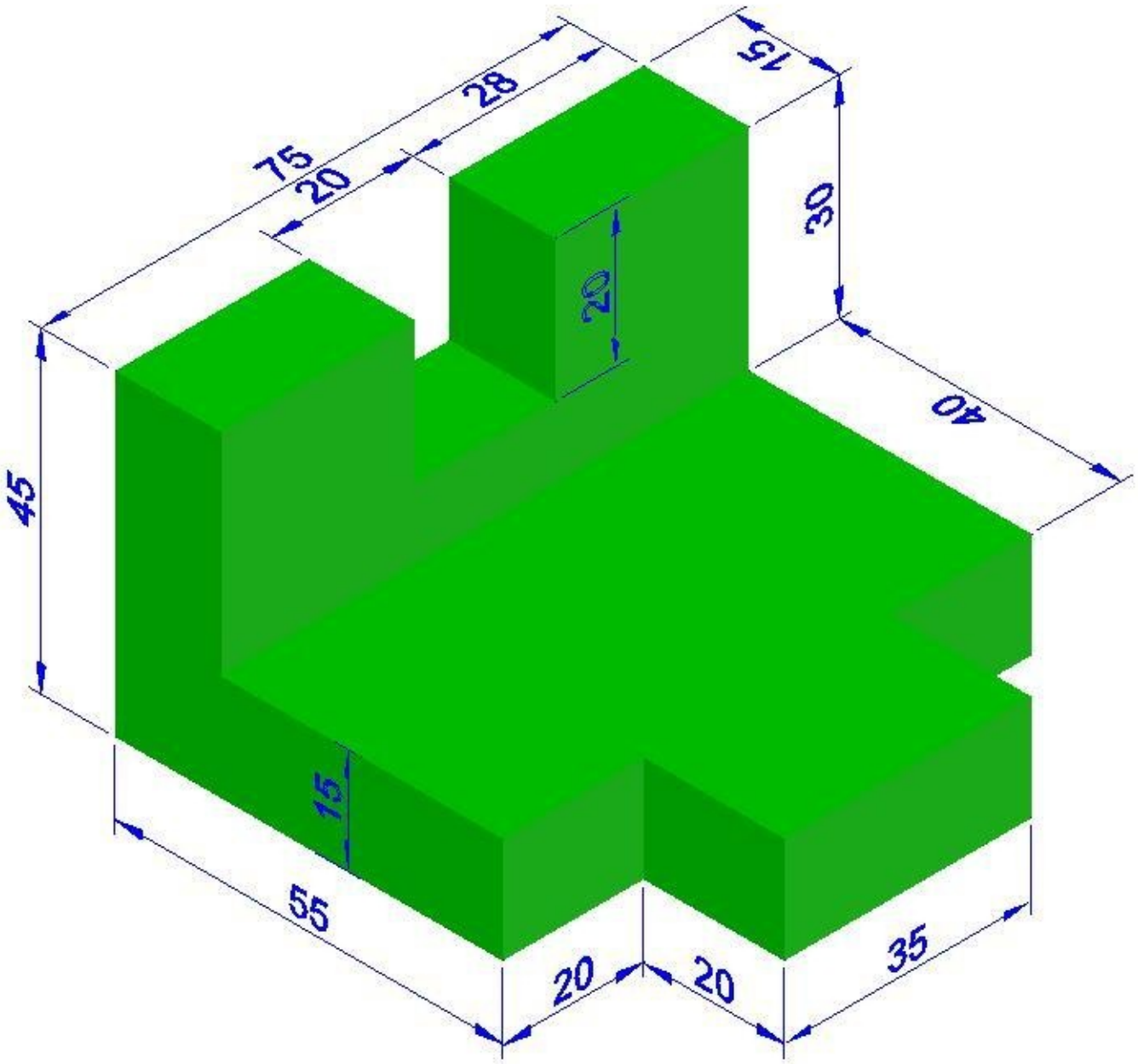
75
28
20
15
30
20
40
45
15
55
20
20
35

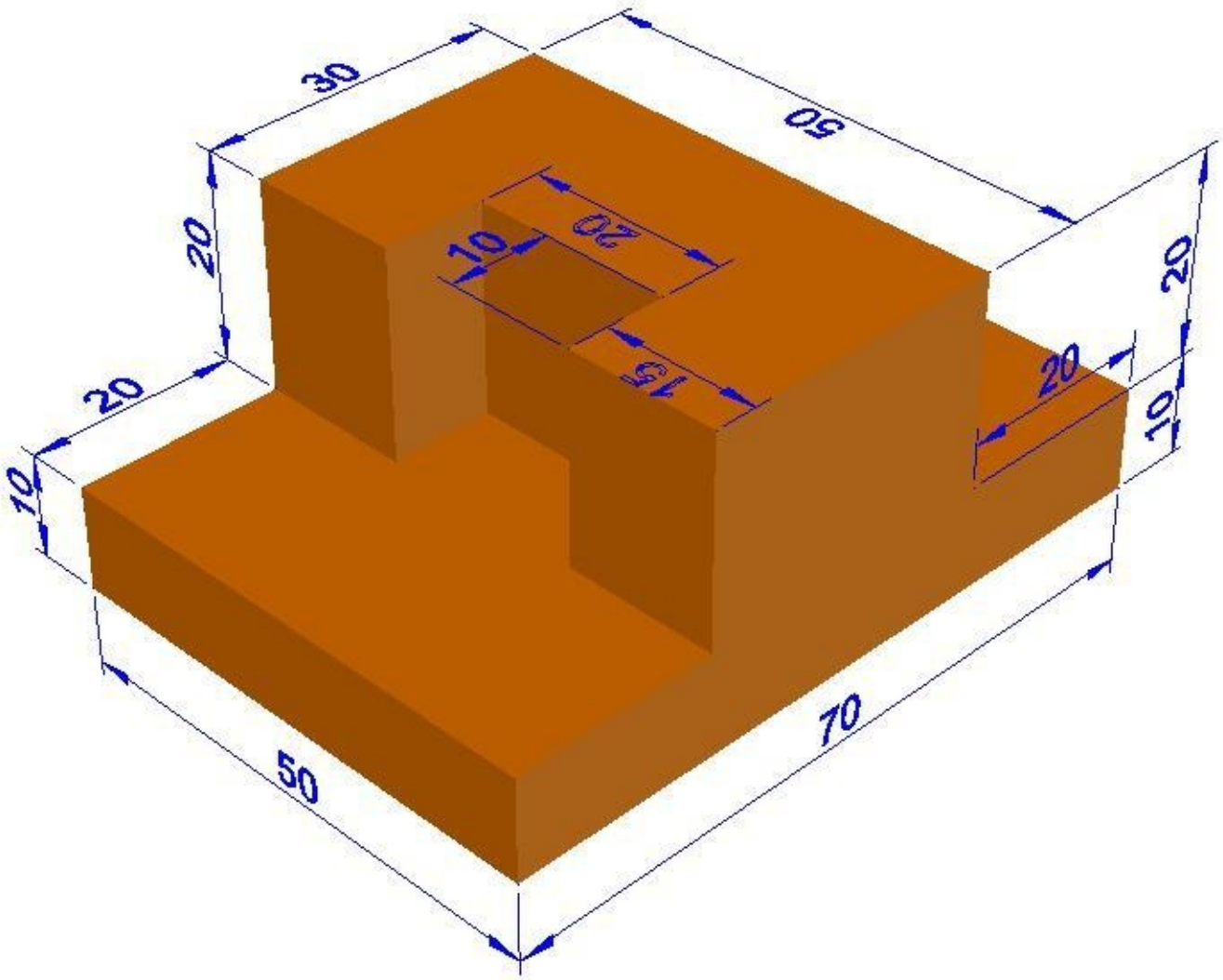
30
50
20
10
20
15
20
20
20
10
10
50
70

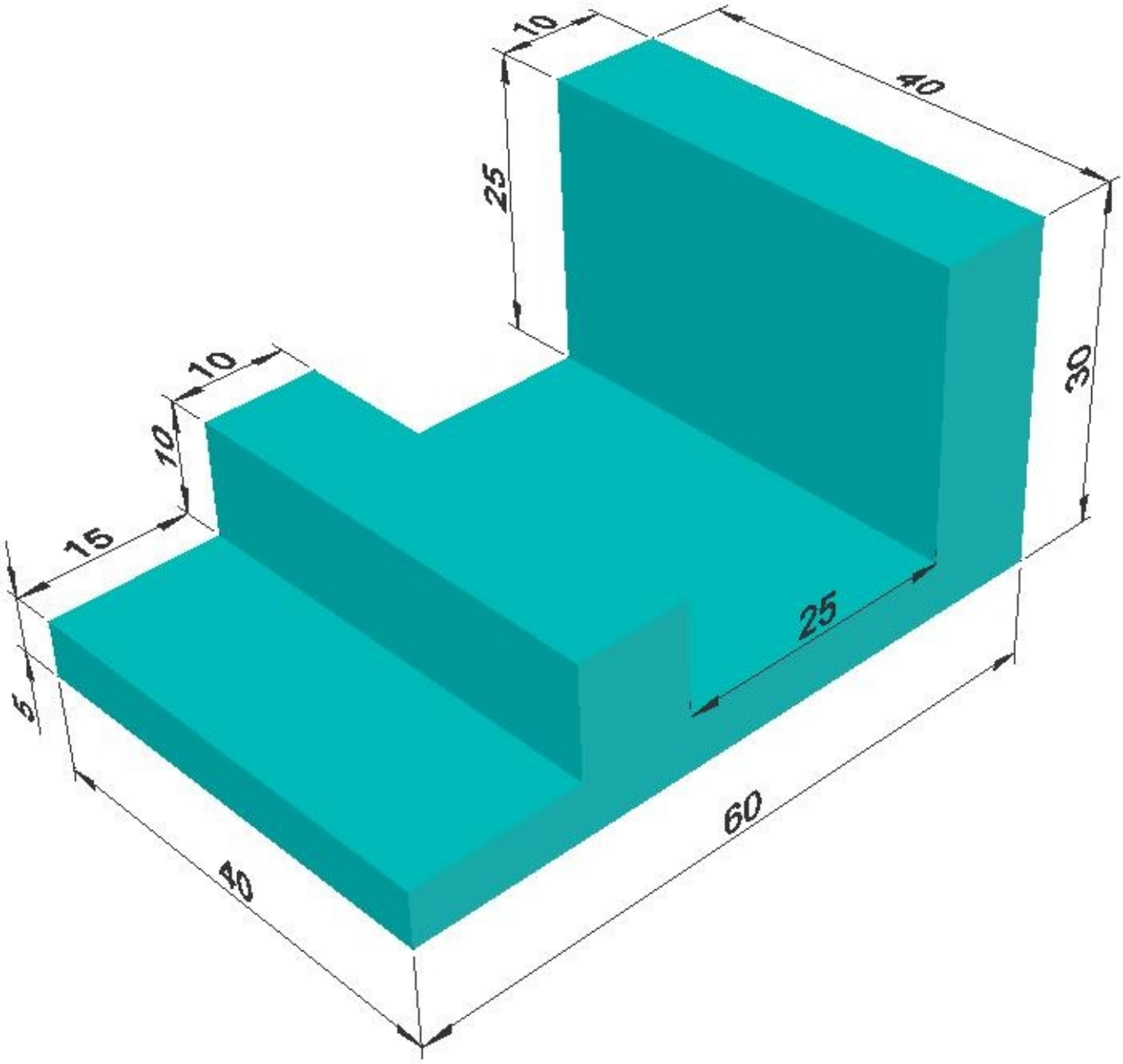
10
40
25
30
10
10
15
25
5
40
60

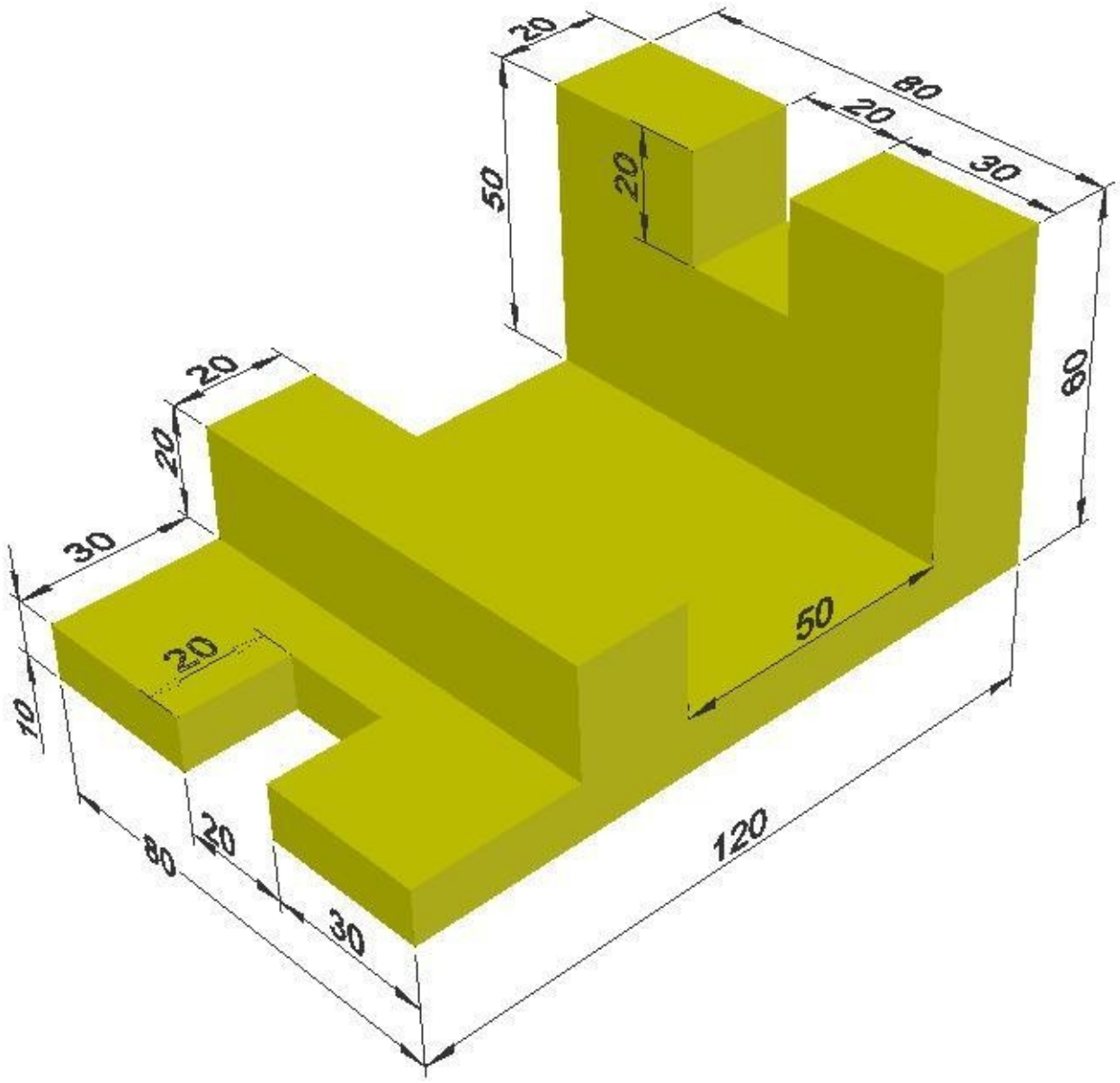
20
80
20
30
50
20
80
20
20
30
50
20
10
80
20
30
120

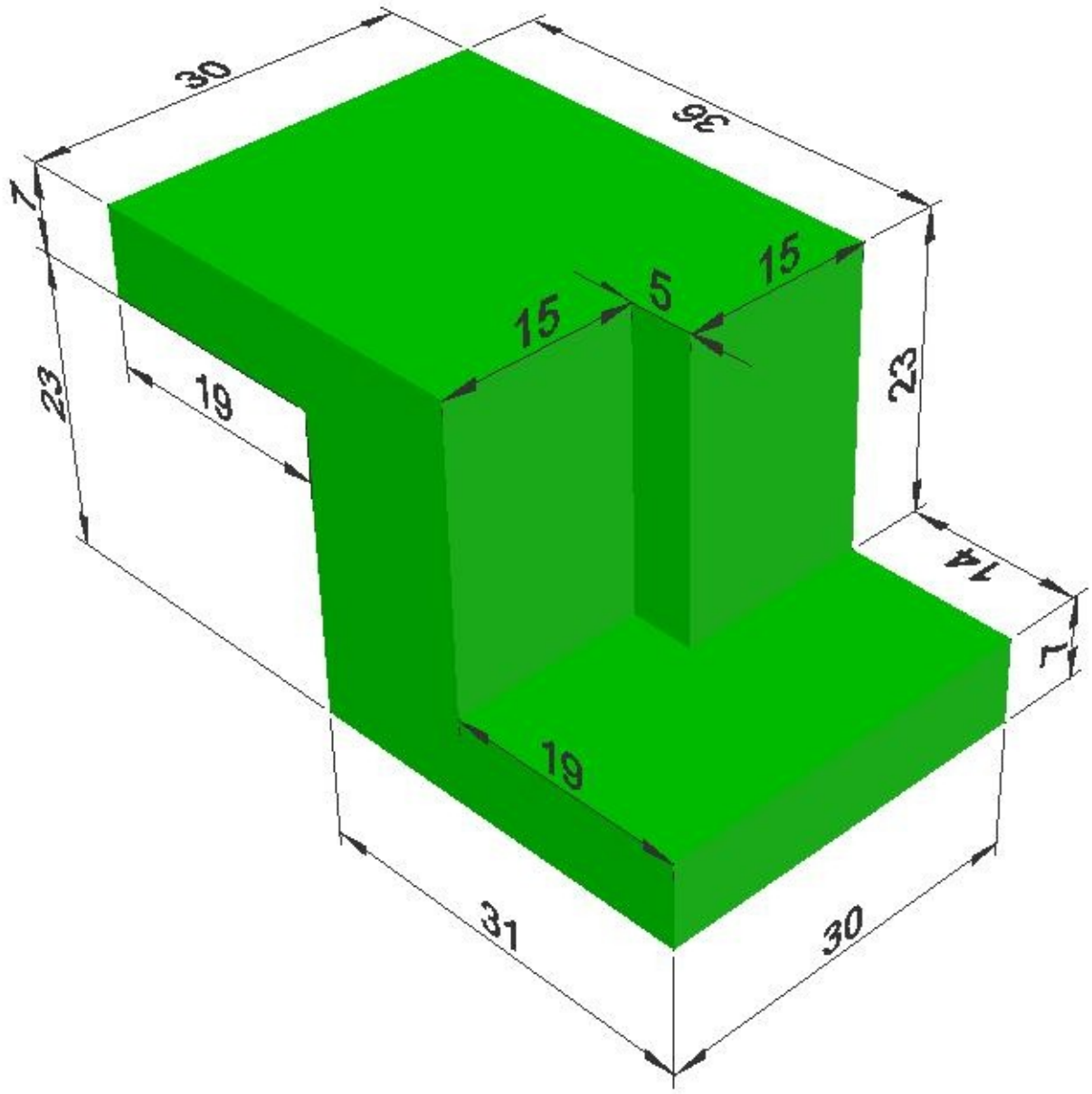
30
26
7
23
19
15
5
15
23
14
7
19
31
30

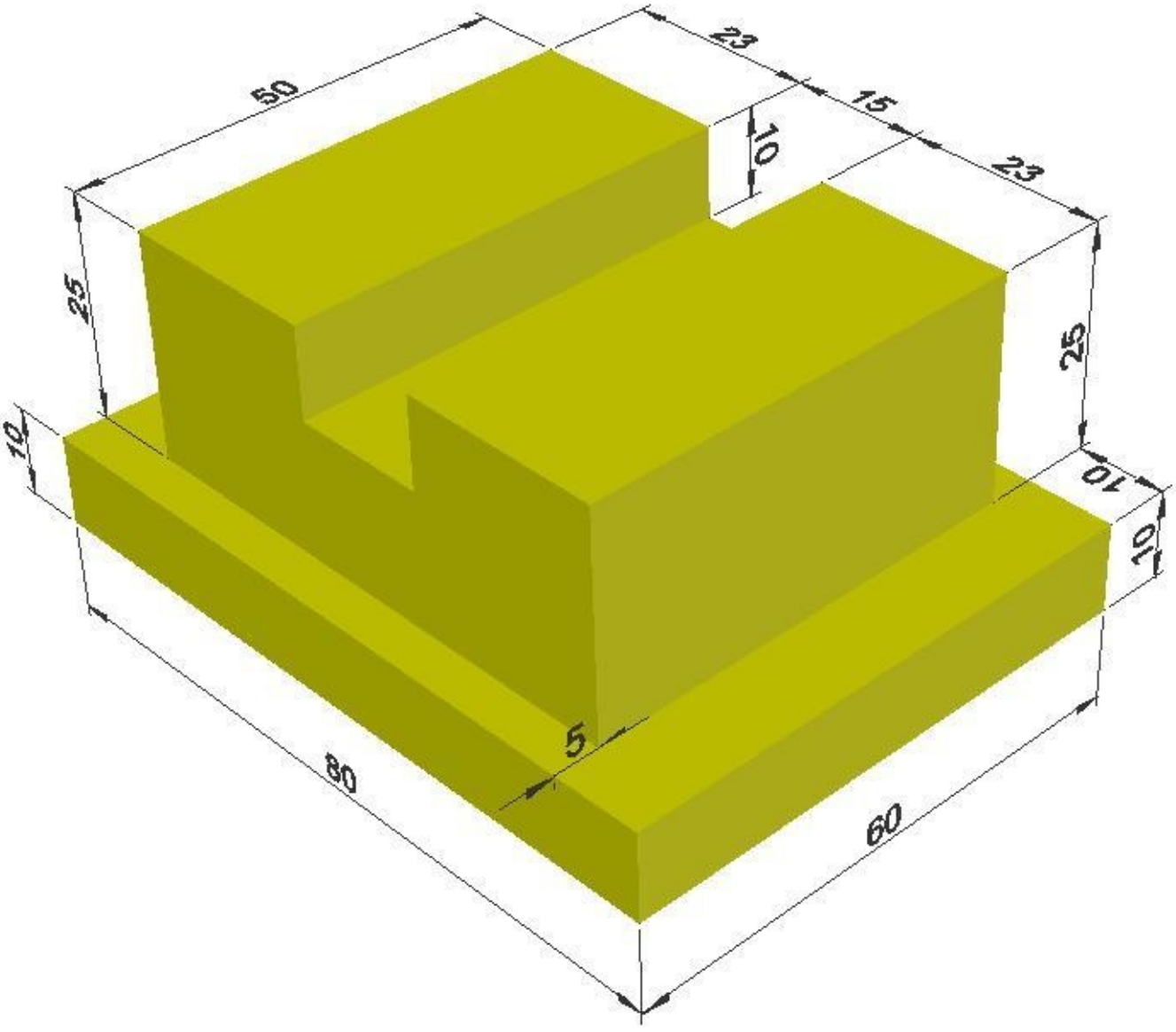
50
23
15
23
10
25
25
10
10
10
5
80
60

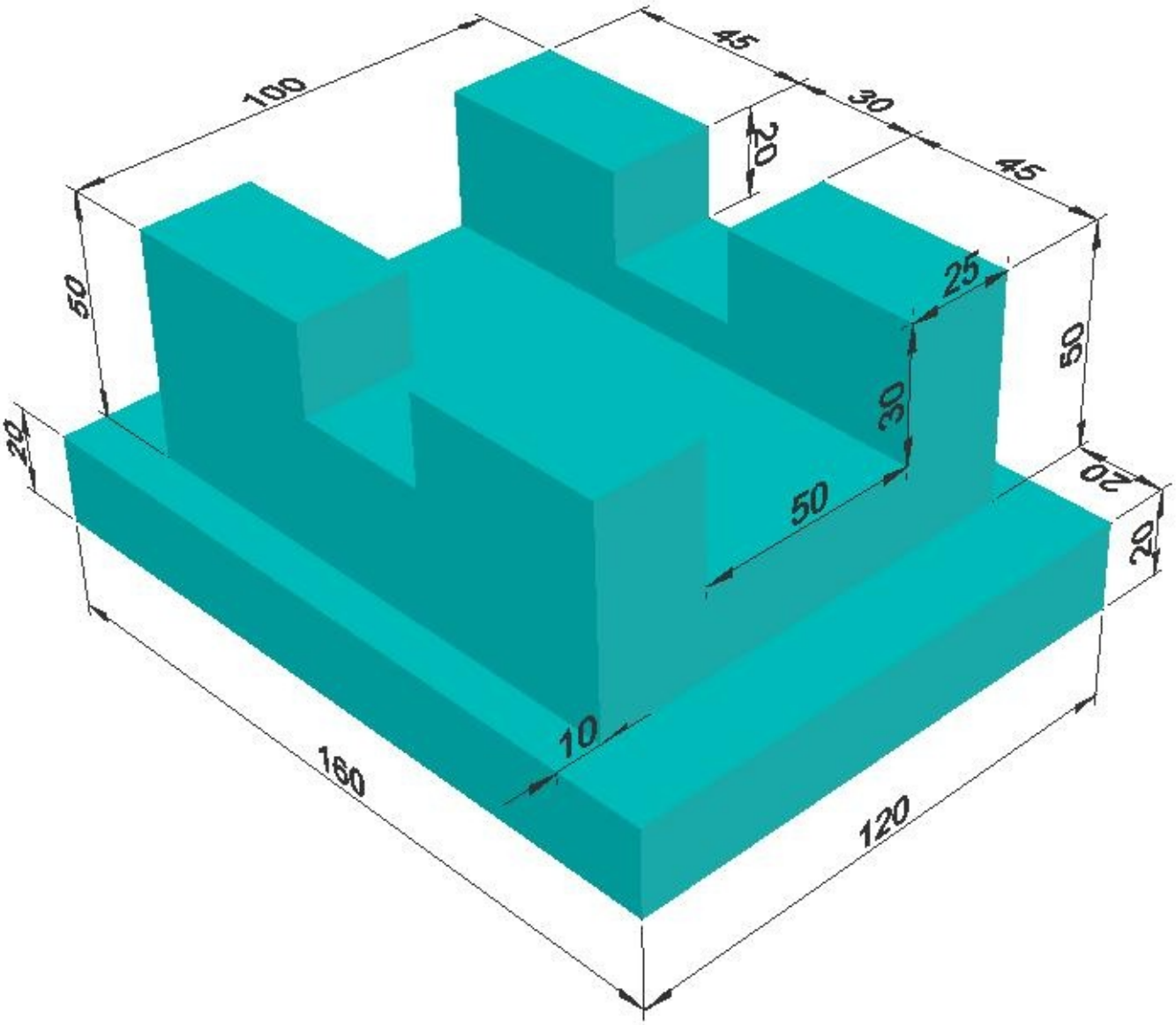
100
45
30
45
20
50
25
60
30
50
20
20
20
10
160
120

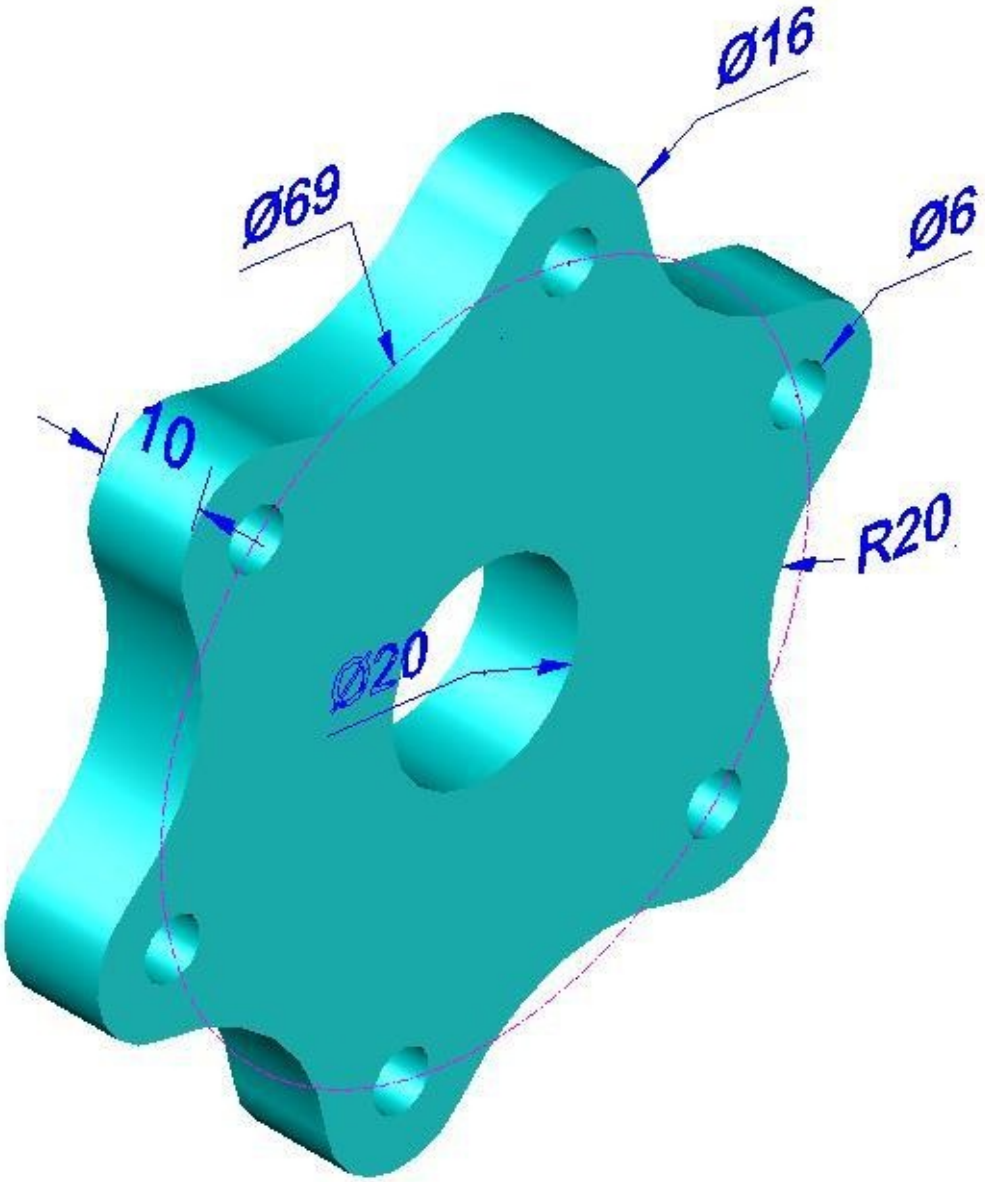
Ø16
Ø69
Ø6
10
R20
Ø20

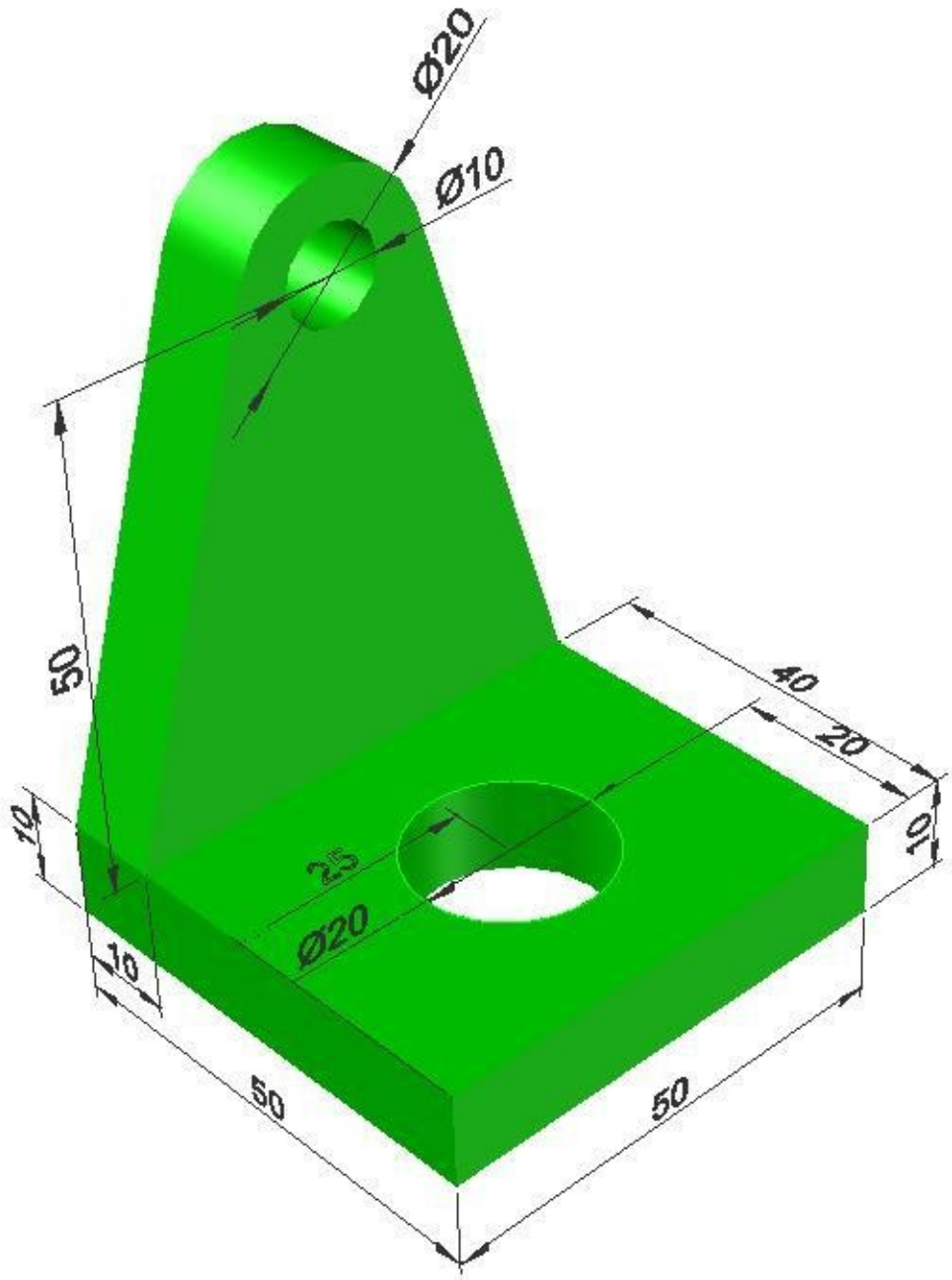
Ø20
Ø10
50
40
20
10
10
25
Ø20
10
50
50

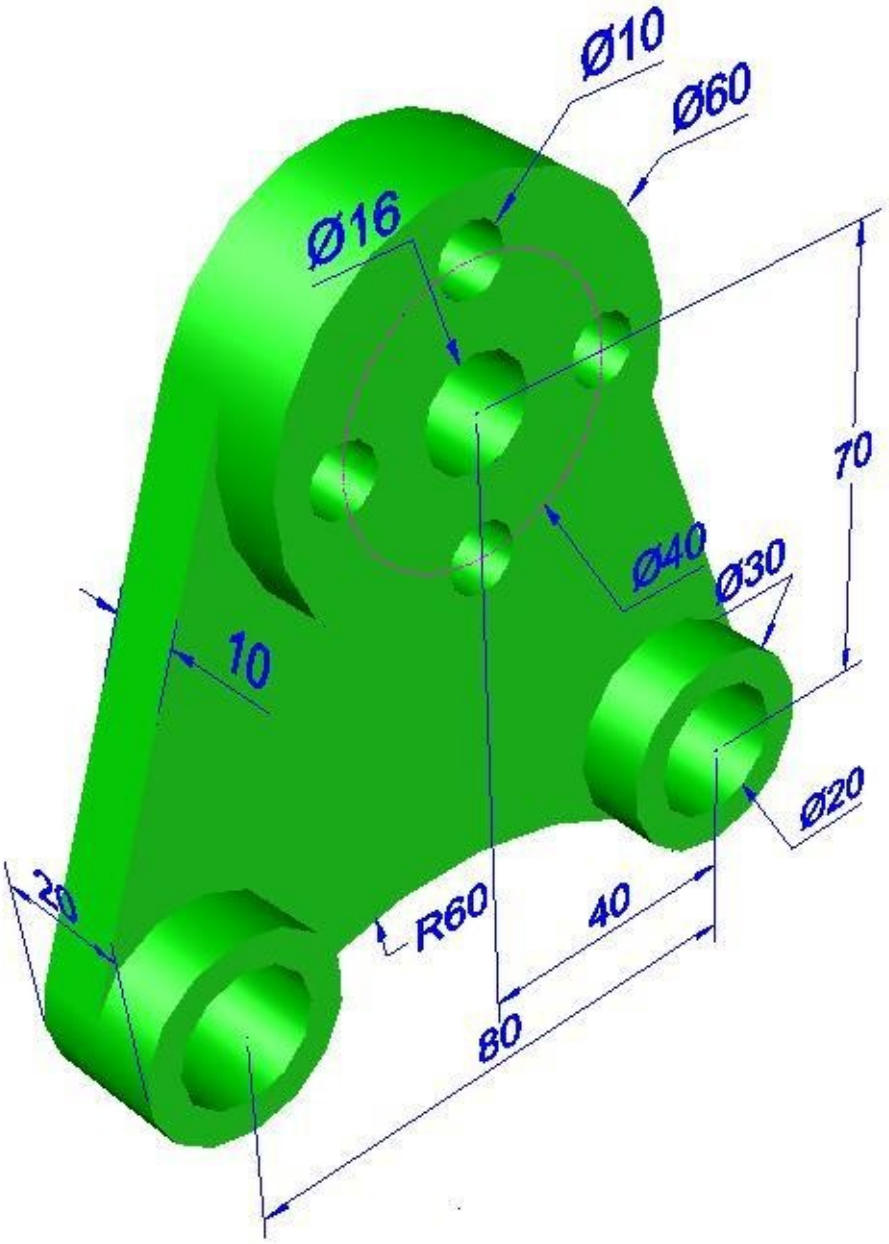
Ø10
Ø60
Ø16
70
Ø40
Ø30
10
Ø20
20
R60
40
80

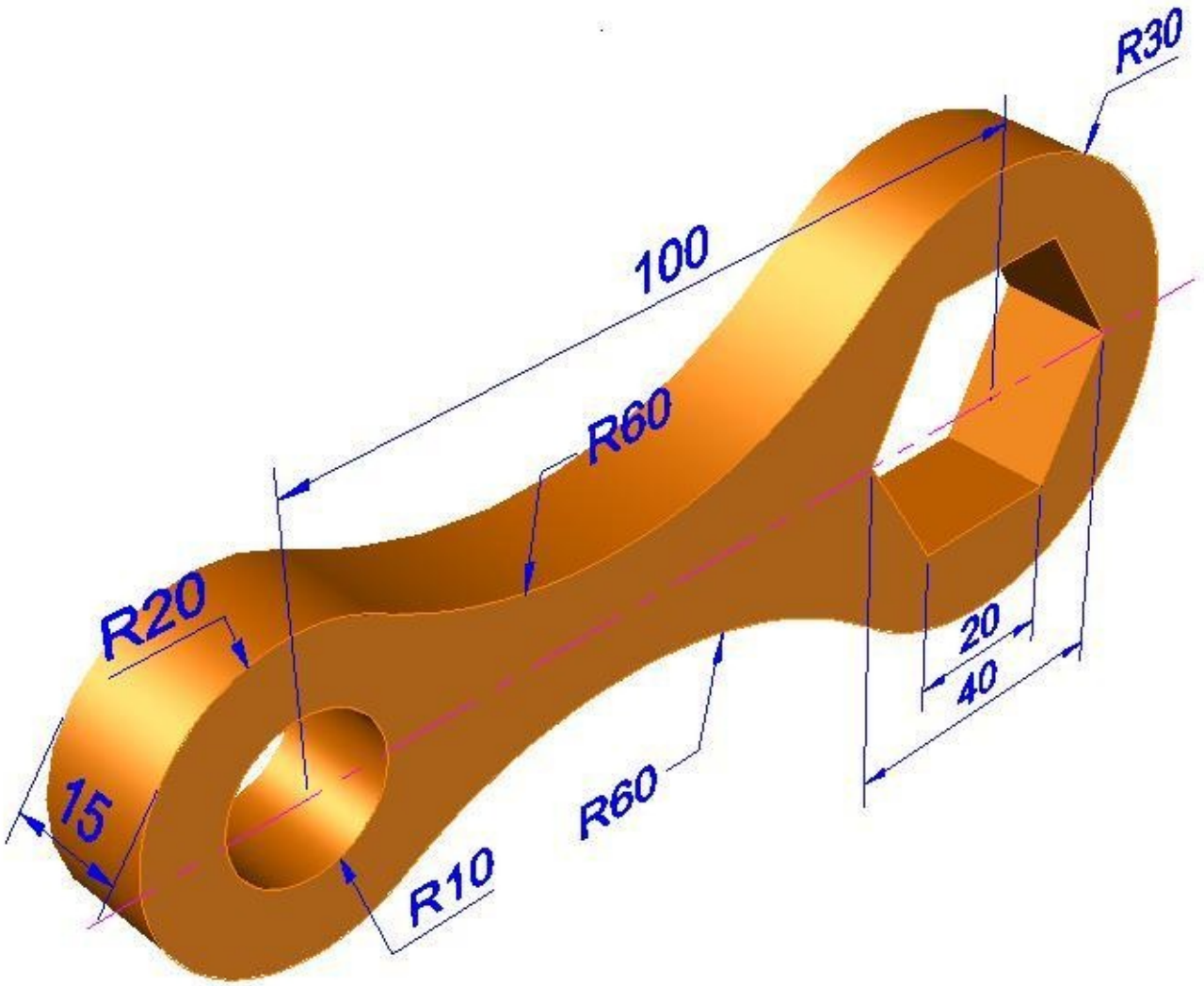
R30
100
R60
R20
20
40
15
R60
R10

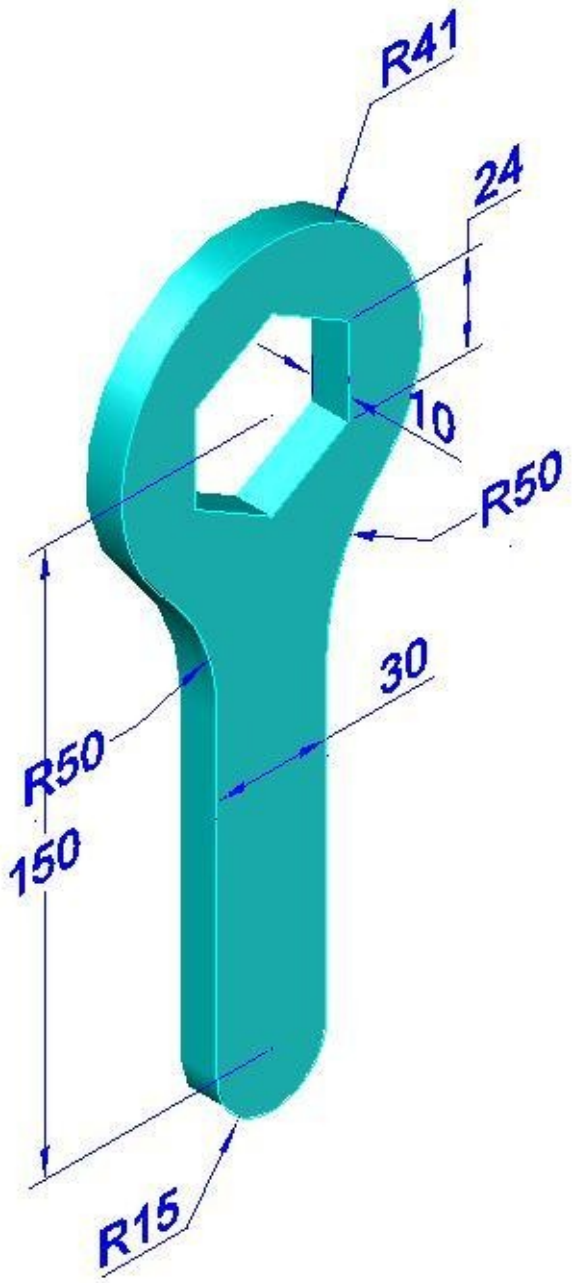
R41
24
10
R50
30
R50
150
R15

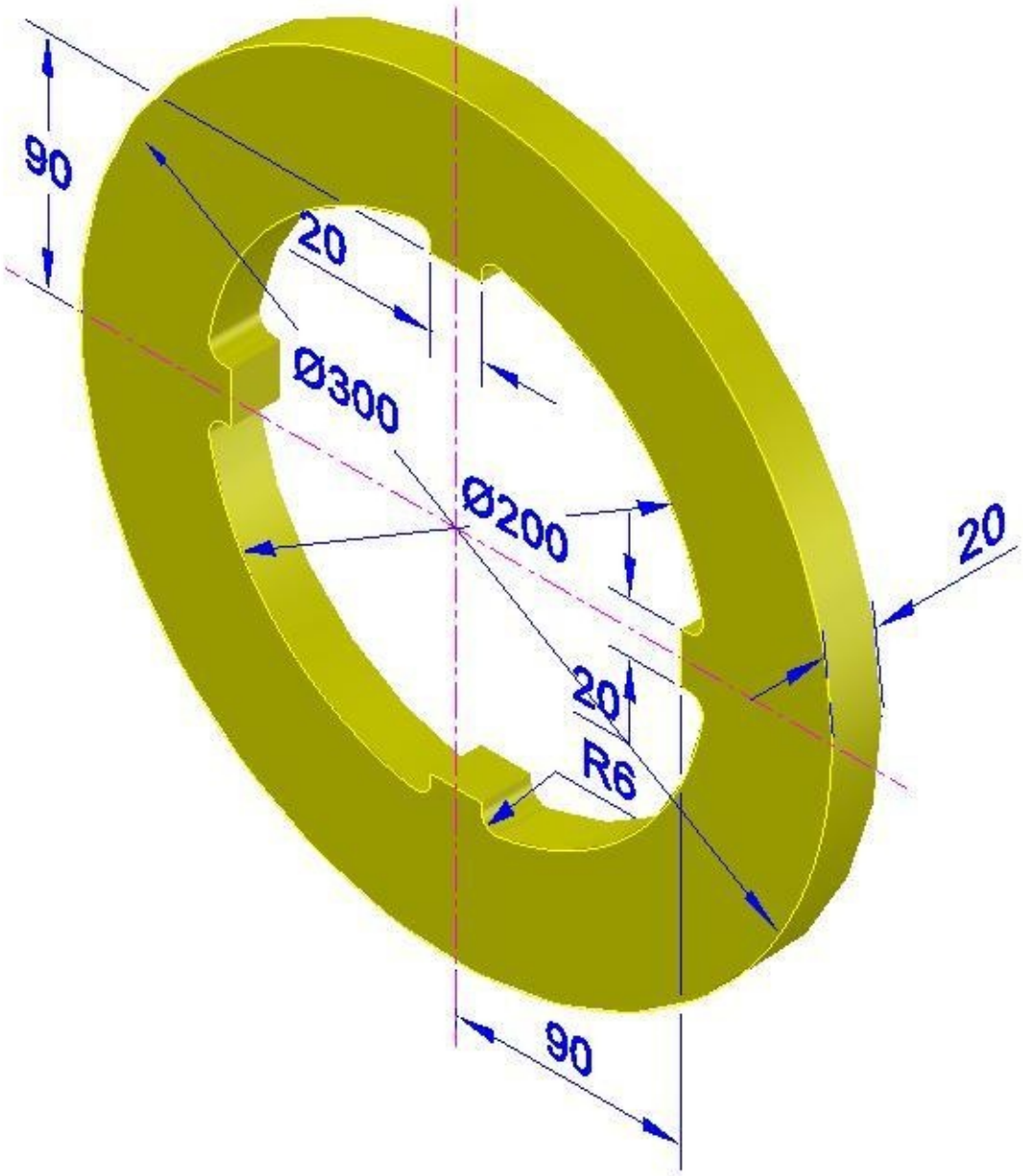
90
20
Ø300
Ø200
20
20
R6
90

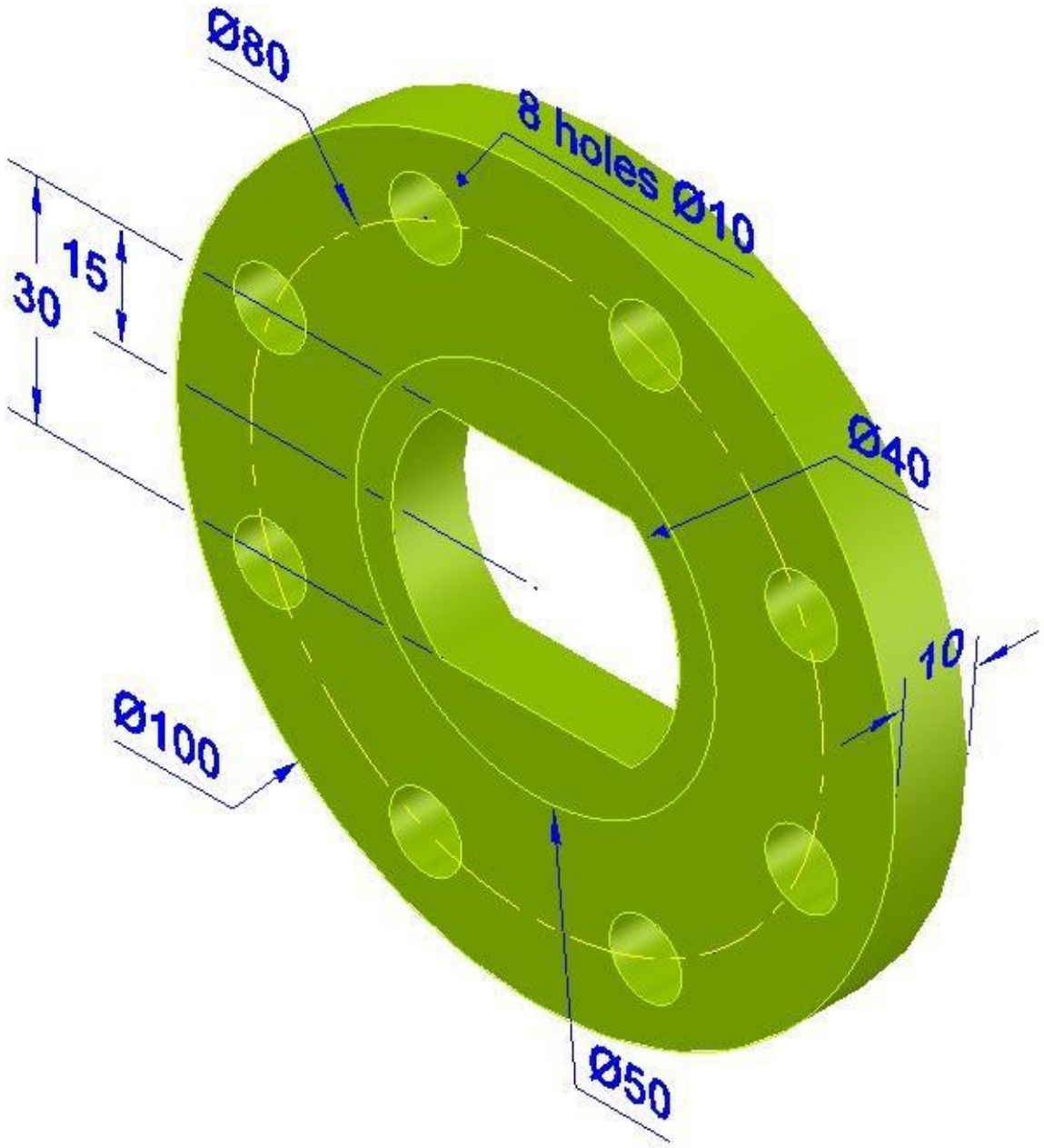
Ø80
8 holes Ø10
15
30
Ø40
10
Ø100
Ø50

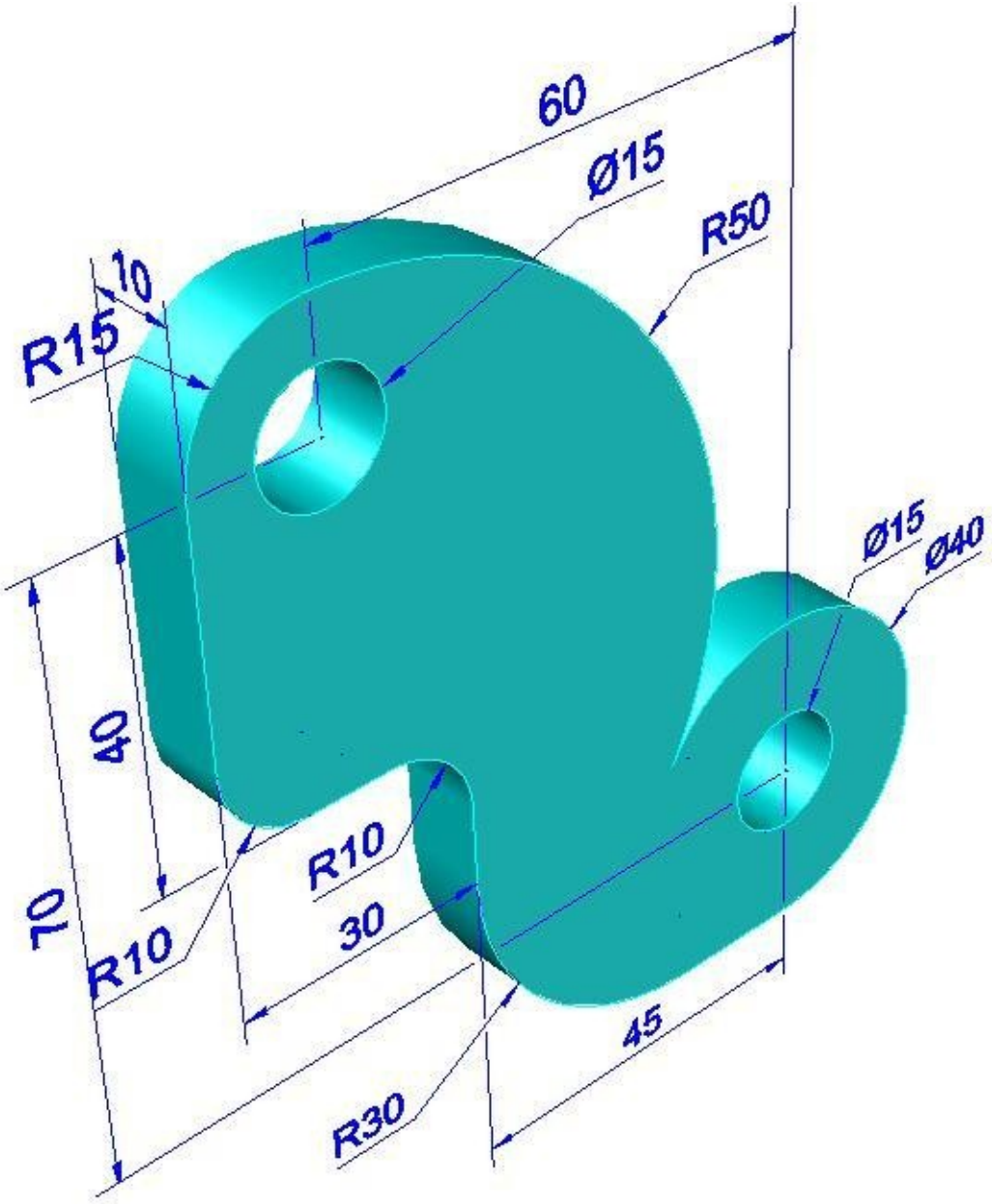
60
Ø15
R50
10
R15
Ø15
Ø40
40
70
R10
R10
30
45
R30

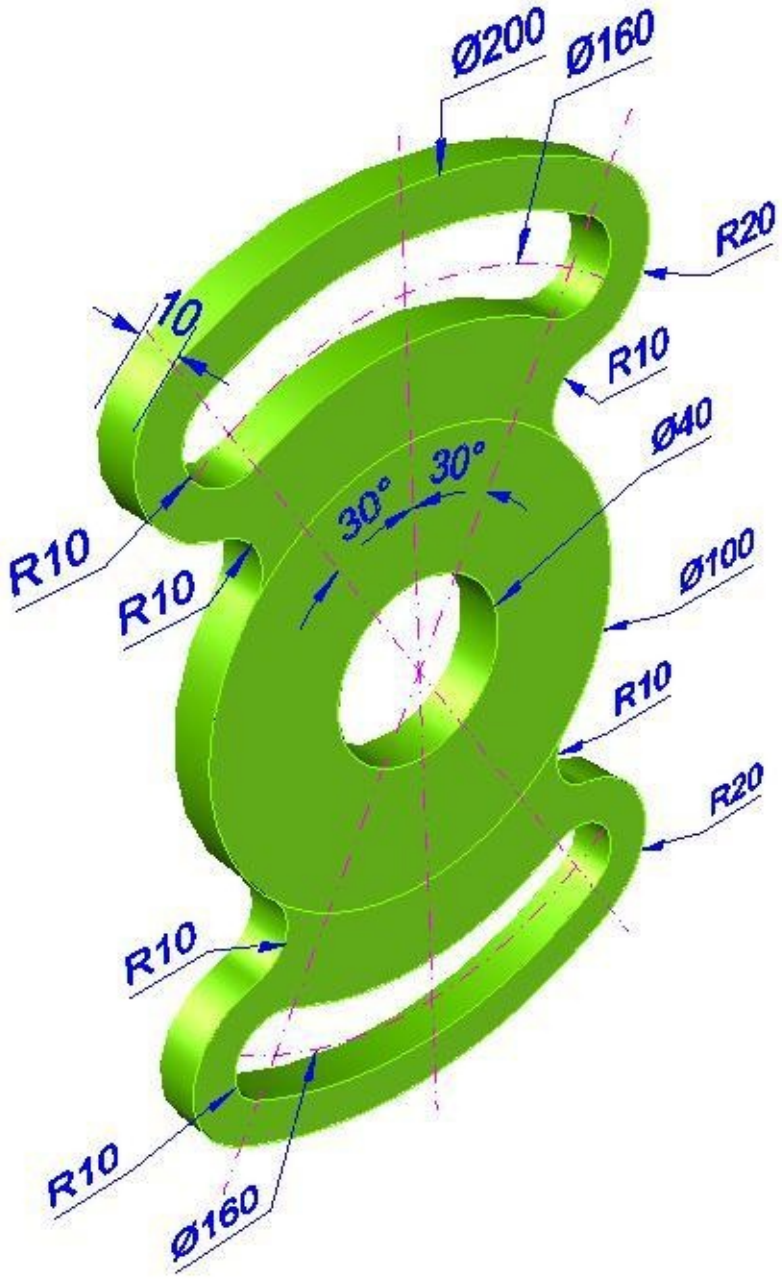
Ø200
Ø160
R20
10
R10
Ø40
30°
30°
R10
R10
Ø100
R10
R20
R10
R10
Ø160

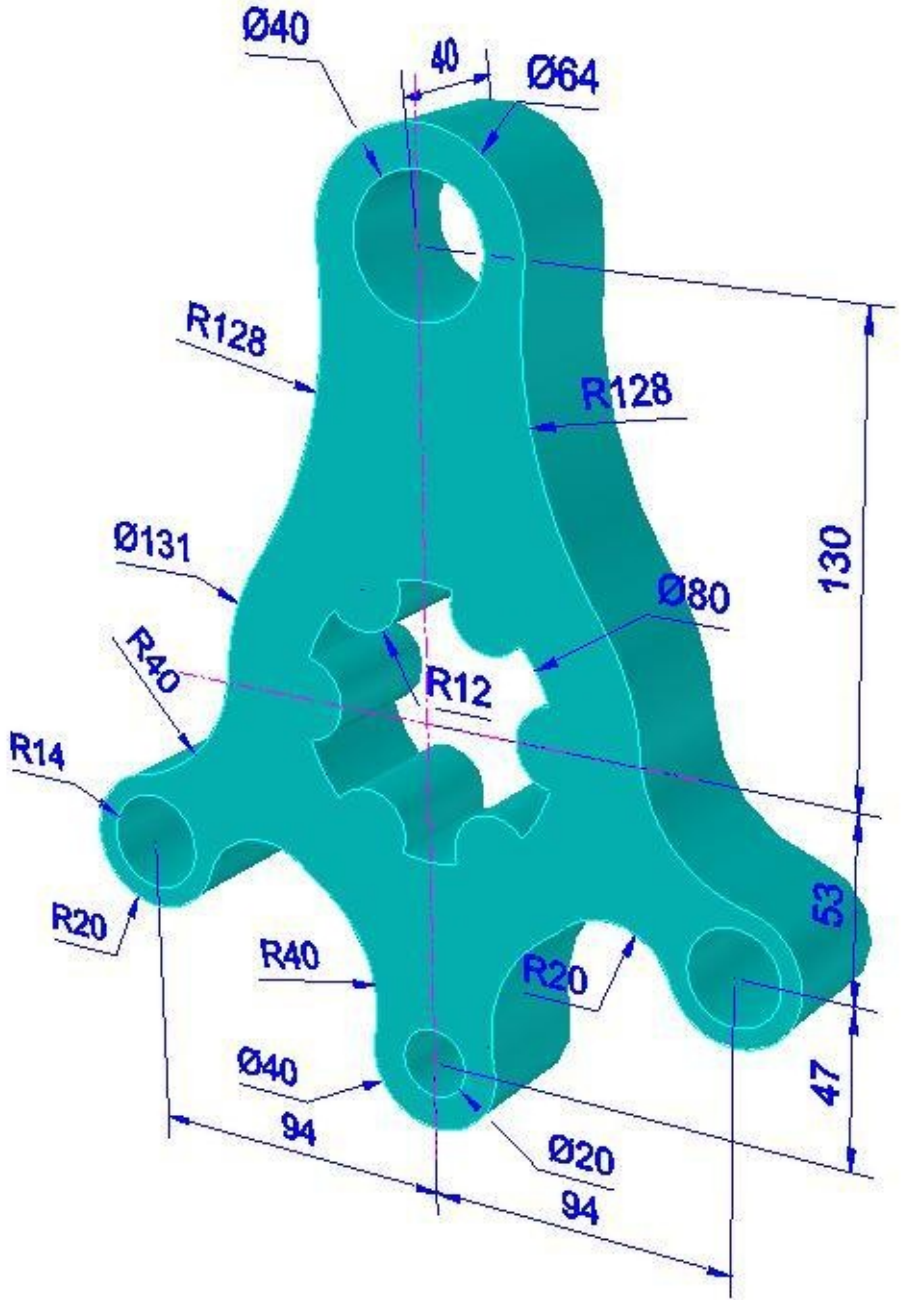
Ø40
40
Ø64
R128
R128
Ø131
Ø80
130
R40
R12
R14
R20
R40
R20
53
Ø40
47
94
Ø20
94

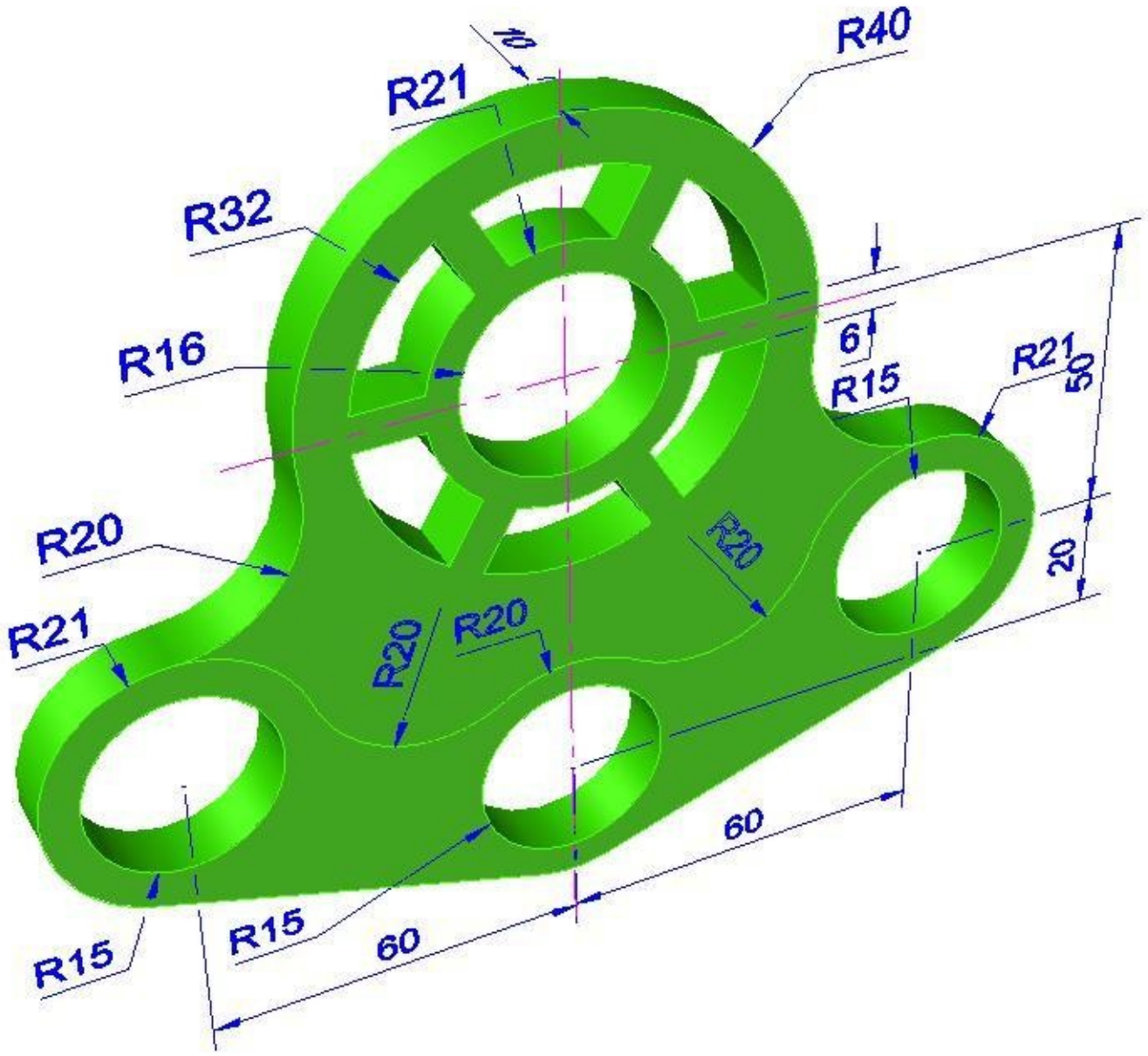

R40
10
R21
R32
R16
6
R15
R21
50
R20
R20
20
R21
R20
R20
60
R15
R15
60

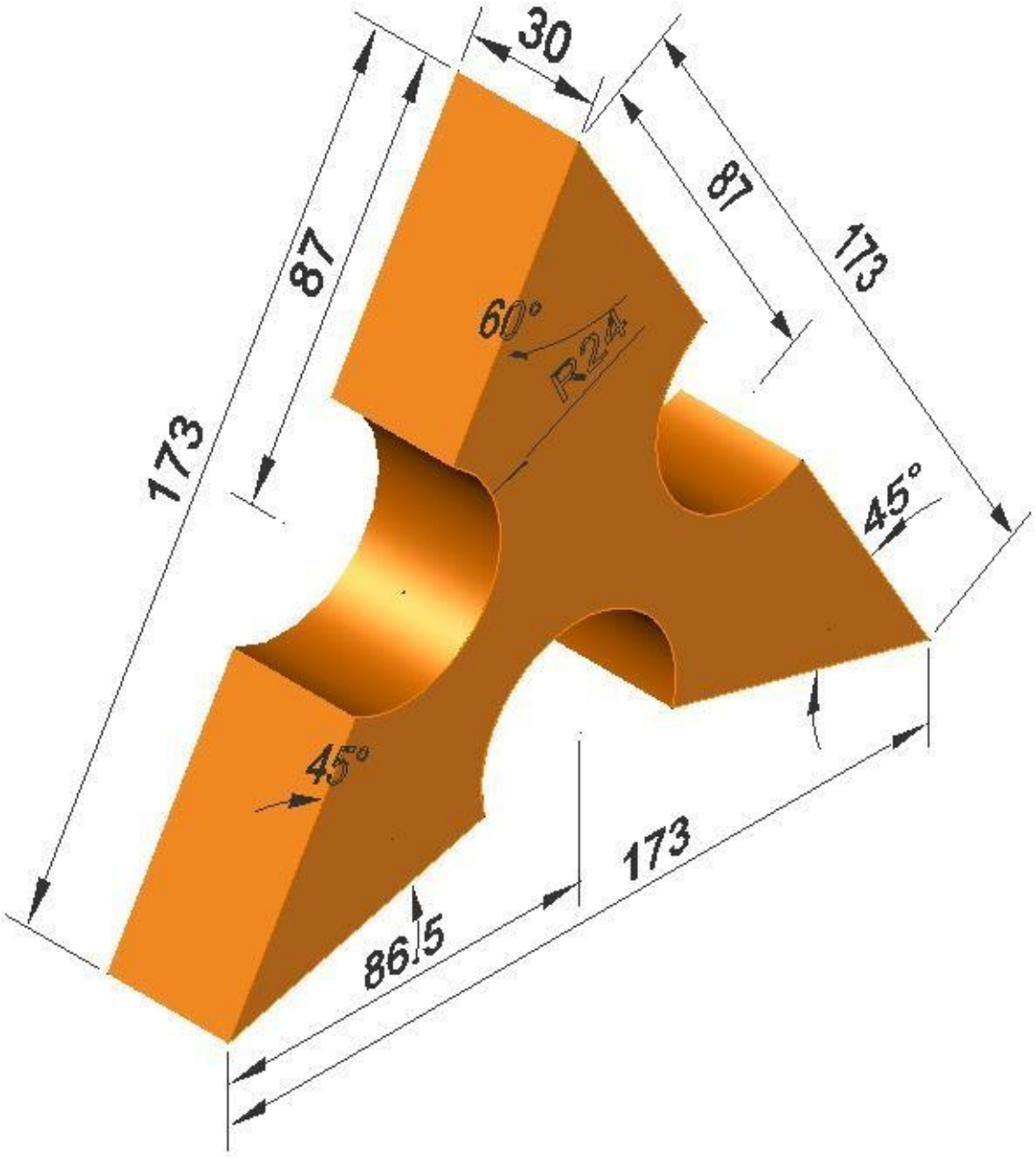
30
87
87
173
173
60°
R24
45°
45°
86.5
173

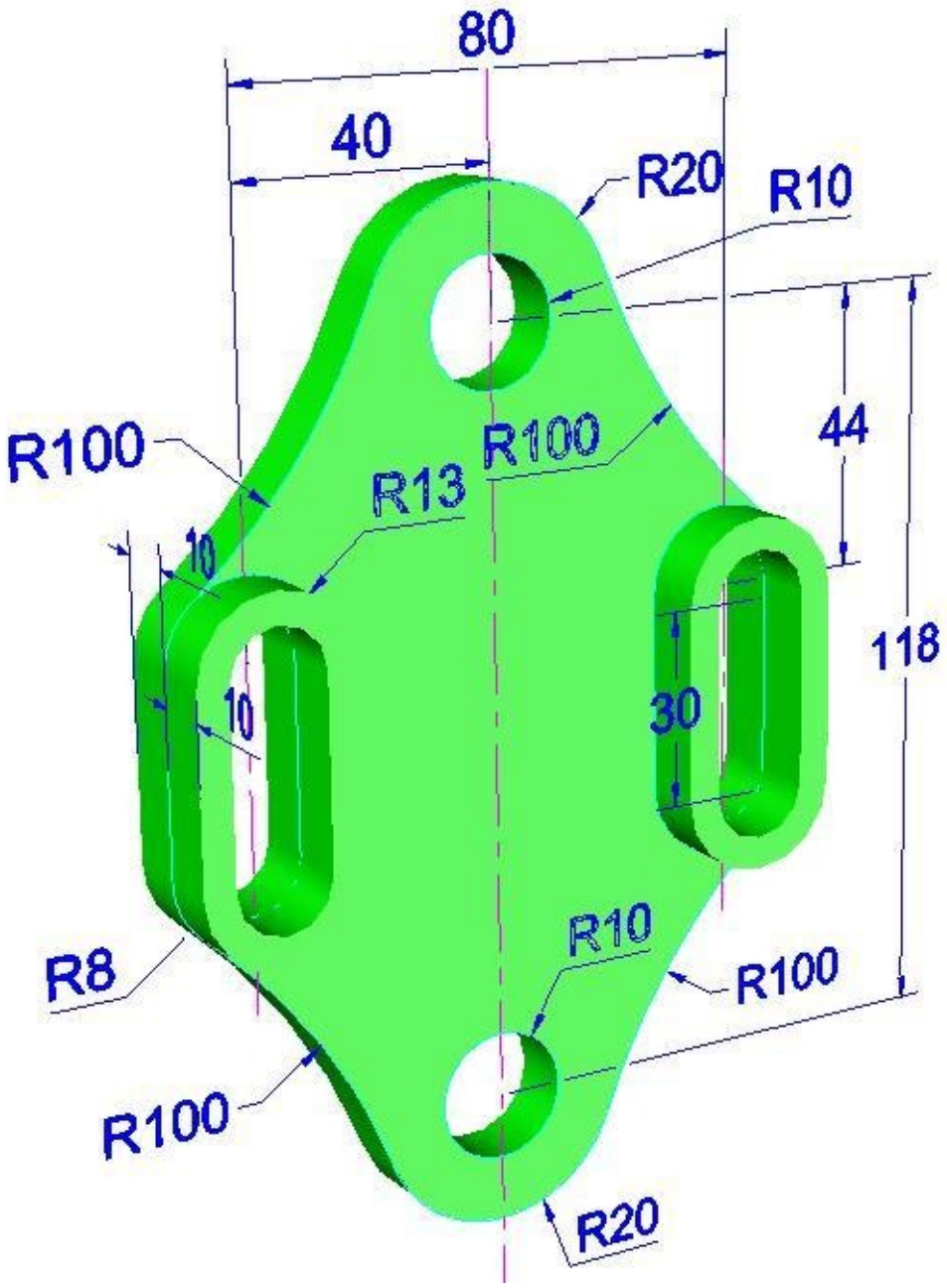
80
40
R20
R10
R100
R100
R13
44
10
10
30
118
R8
R10
R100
R100
R20

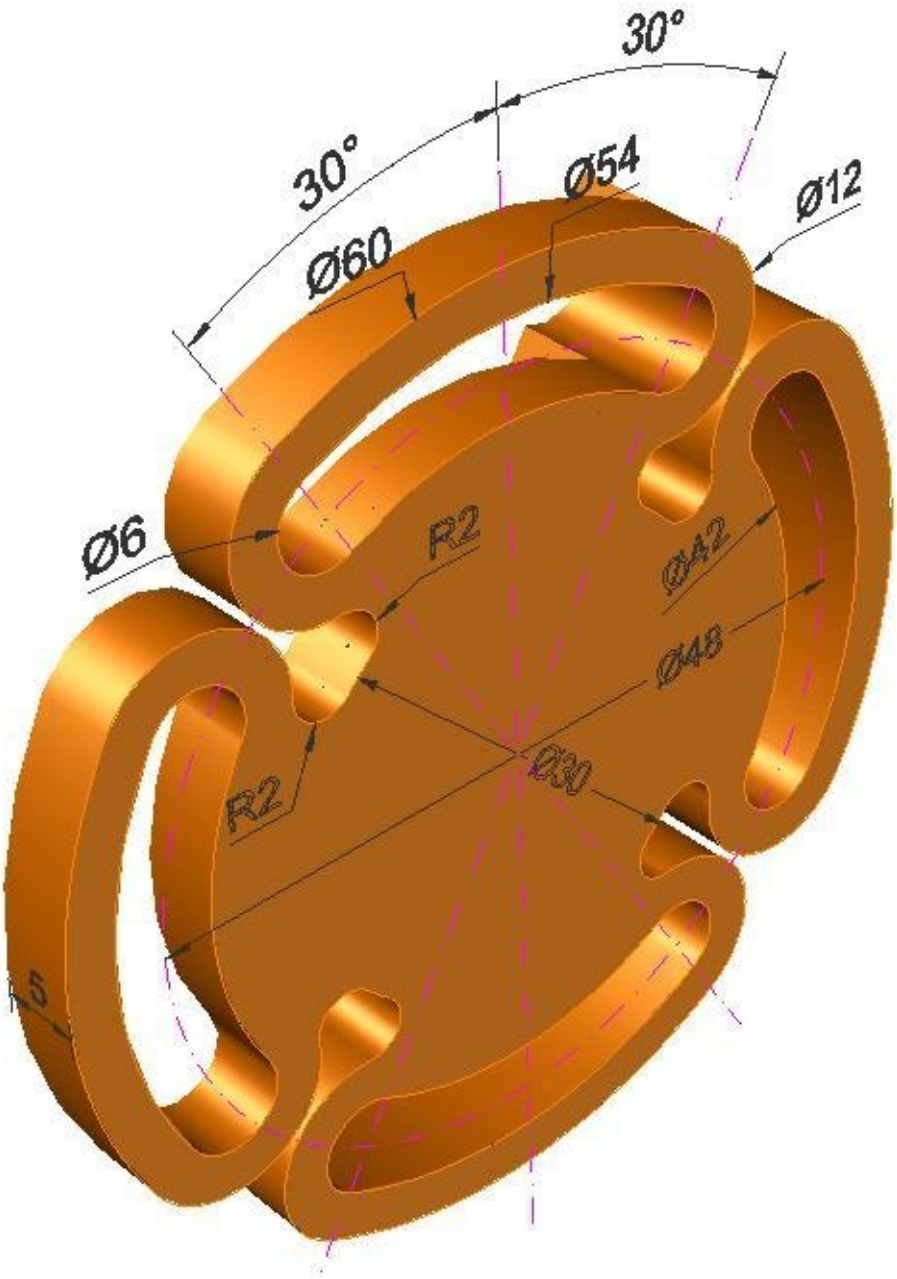
30°
30°
Ø54
Ø12
Ø60
Ø6
R2
Ø42
Ø48
Ø30
R2
5

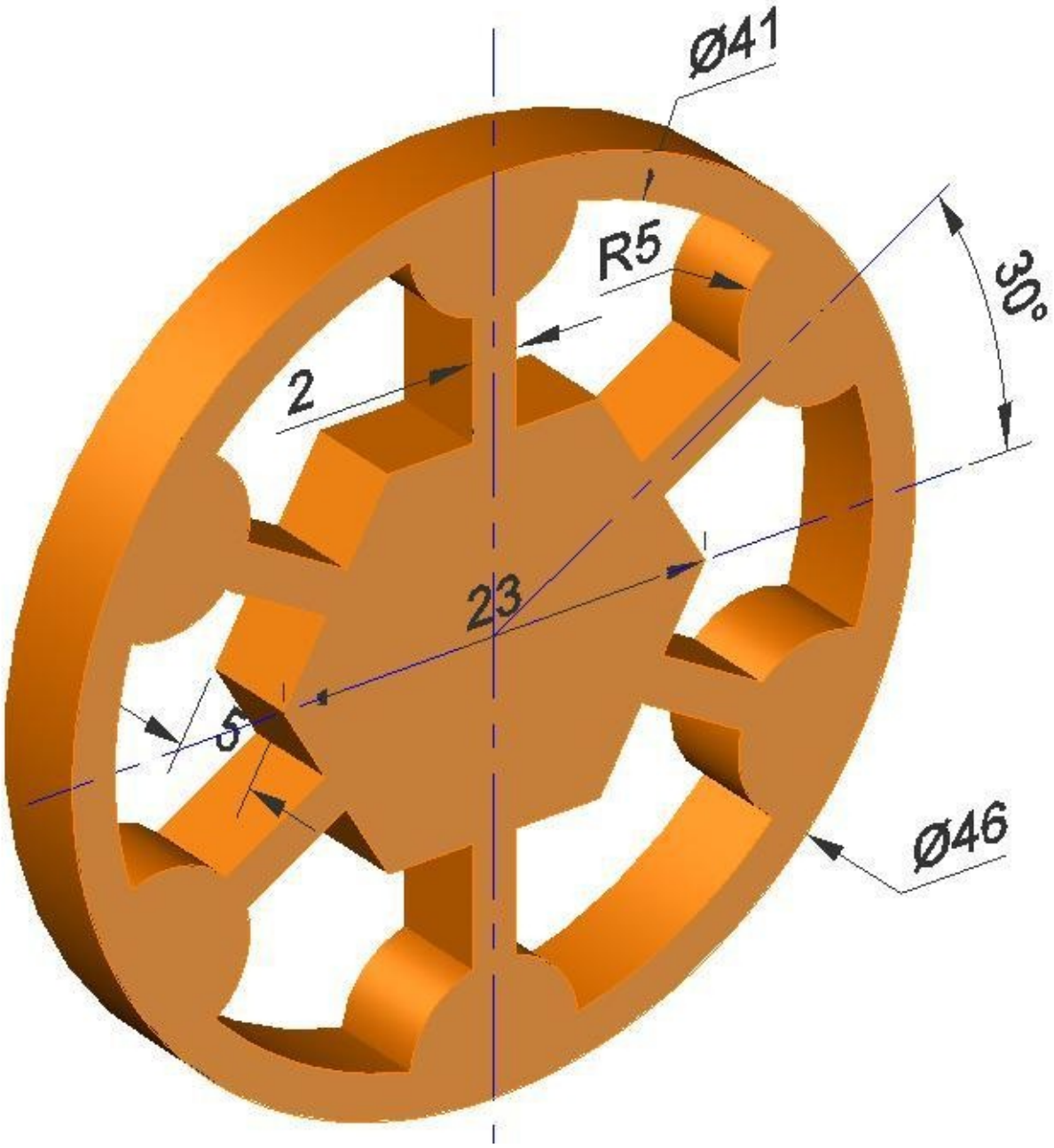
Ø41
R5
30°
2
23
5
Ø46

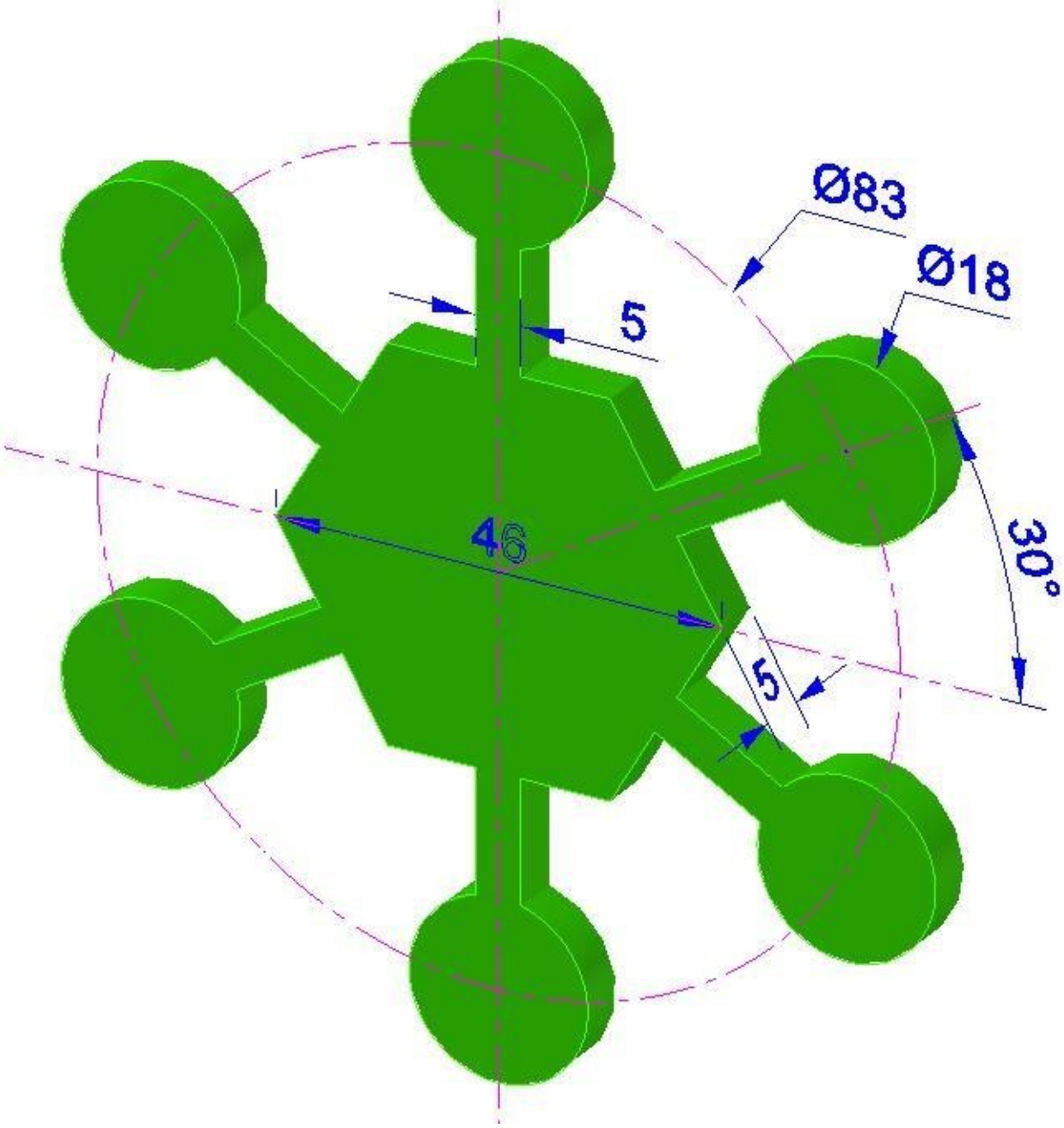
Ø83
Ø18
5
46
30°
5

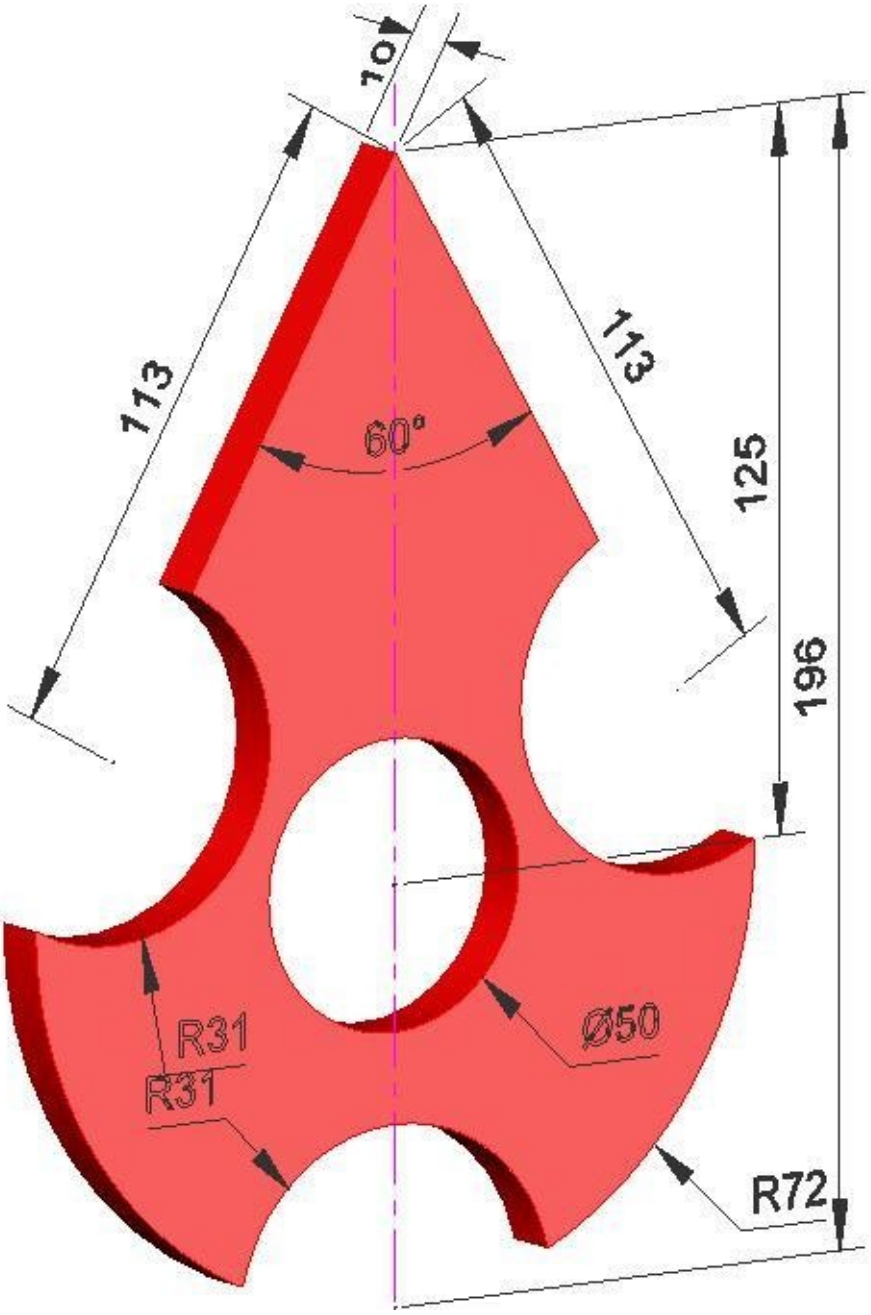
10
113
113
60°
125
196
R31
R31
Ø50
R72

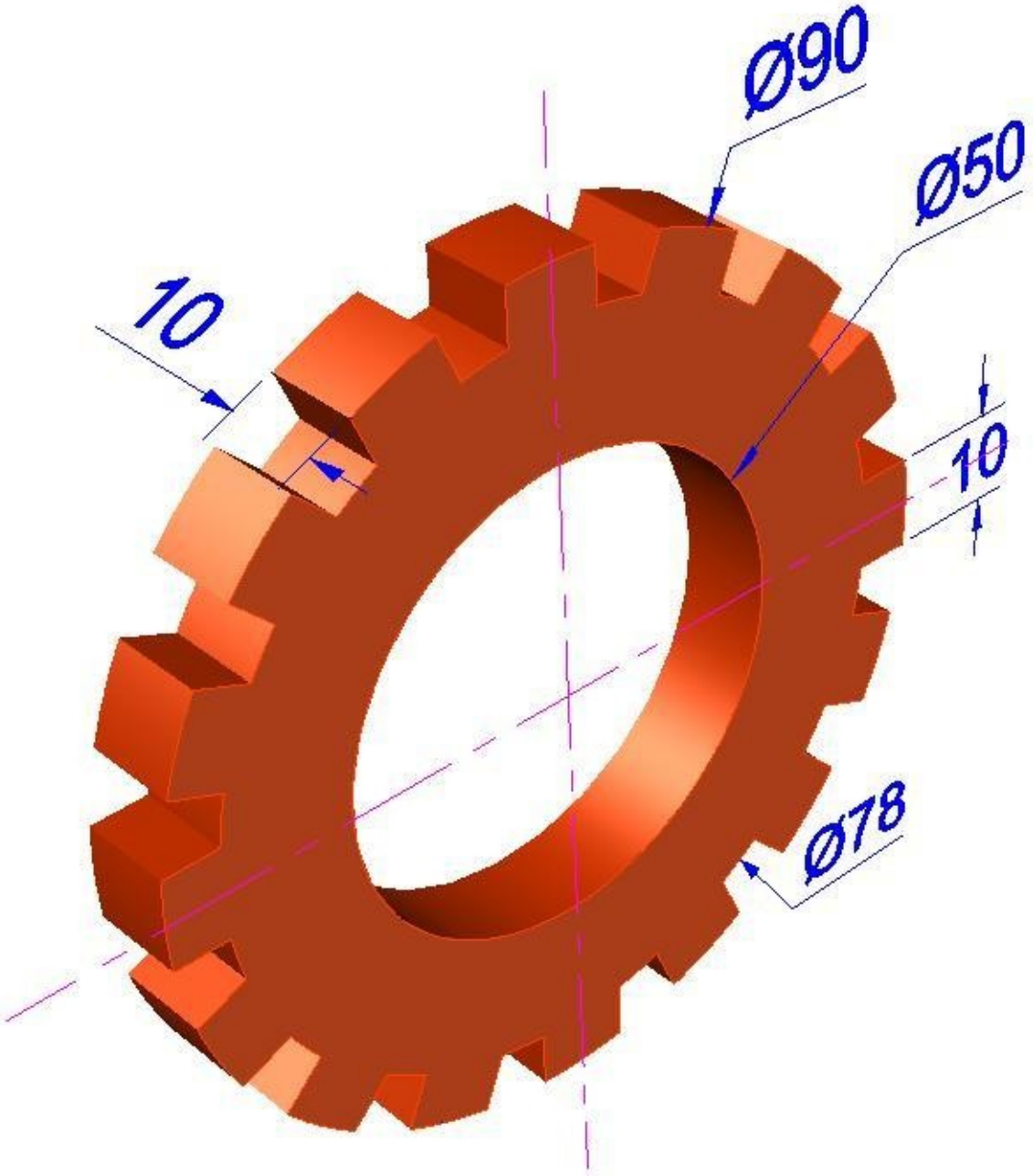
Ø90
Ø50
10
10
Ø78

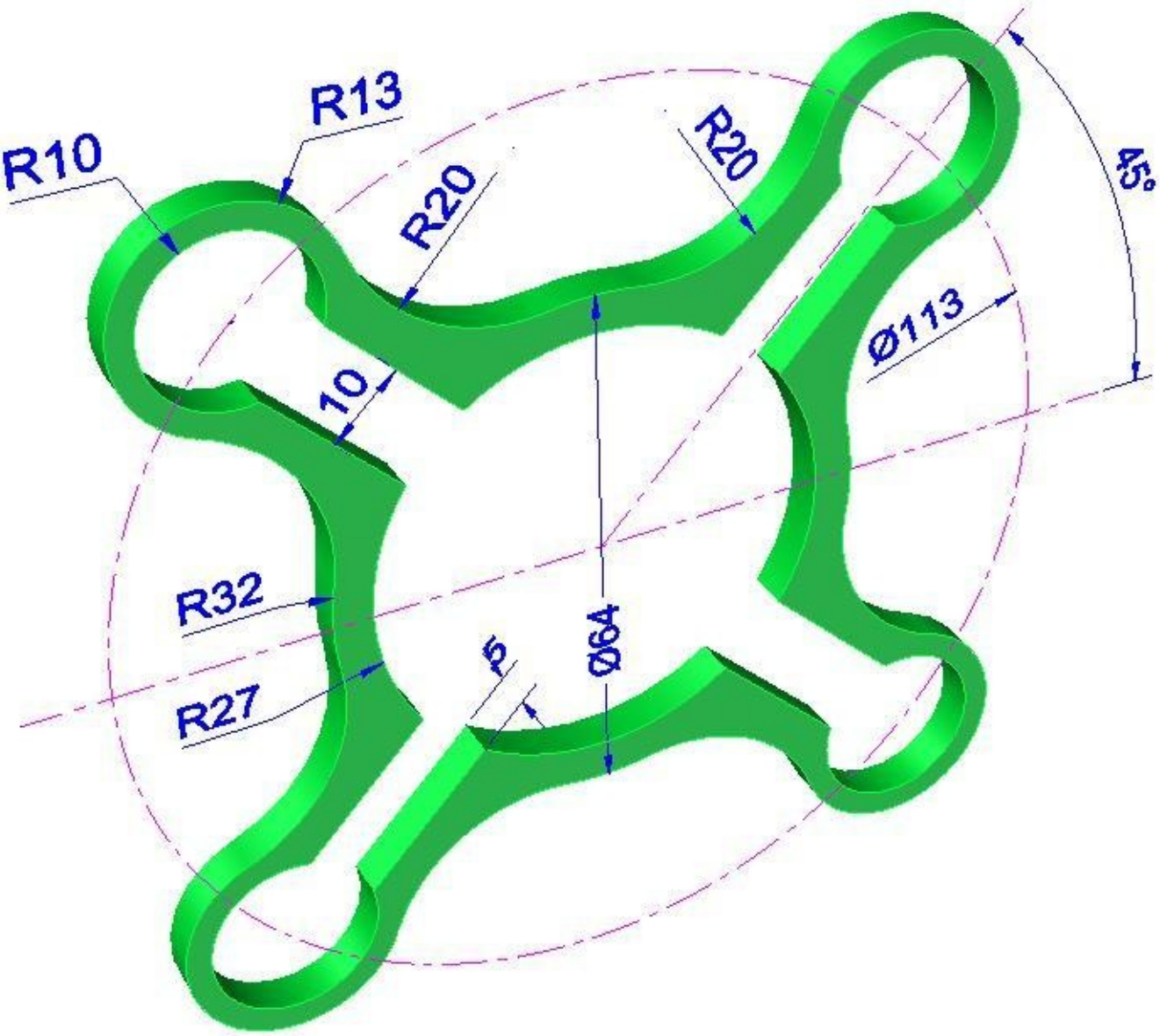
R10
R13
R20
R20
45°
Ø113
10
R32
R27
6
Ø64

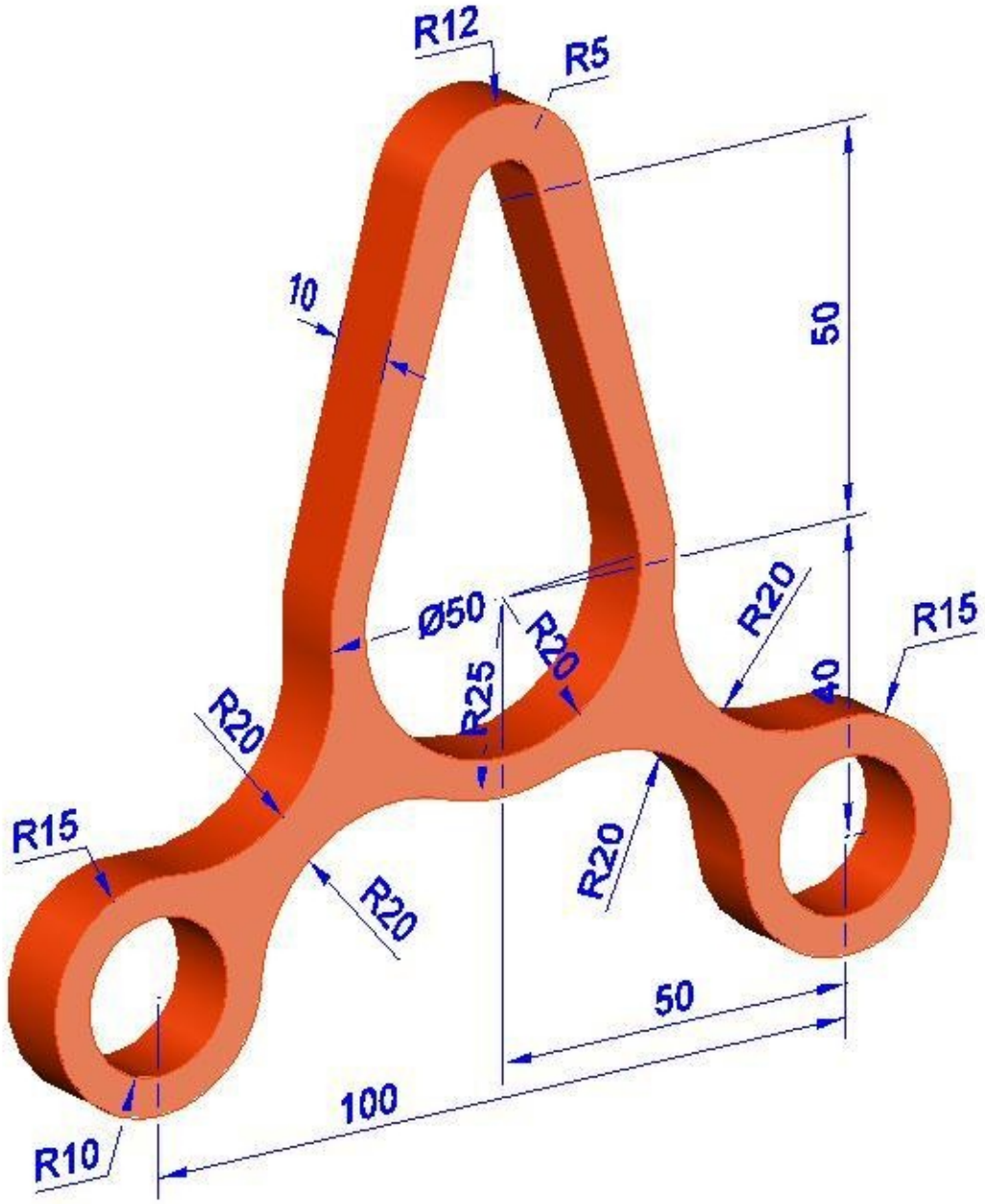
R12
R5
10
50
Ø50
R20
R20
R15
R25
40
R20
R15
R20
R20
50
100
R10

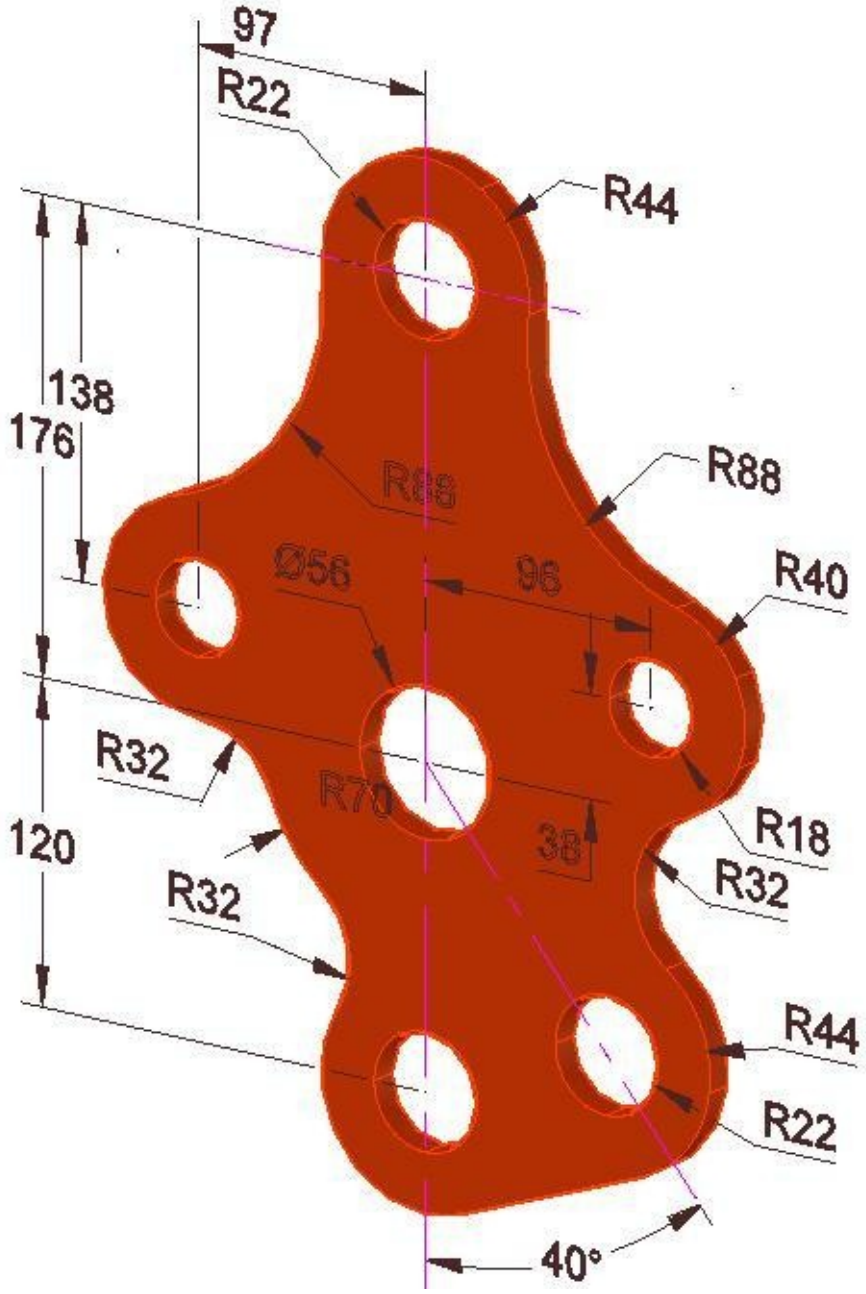
97
R22
R44
138
176
R88
R88
Ø56
96
R40
R32
R70
120
38
R18
R32
R32
R44
R22
40°

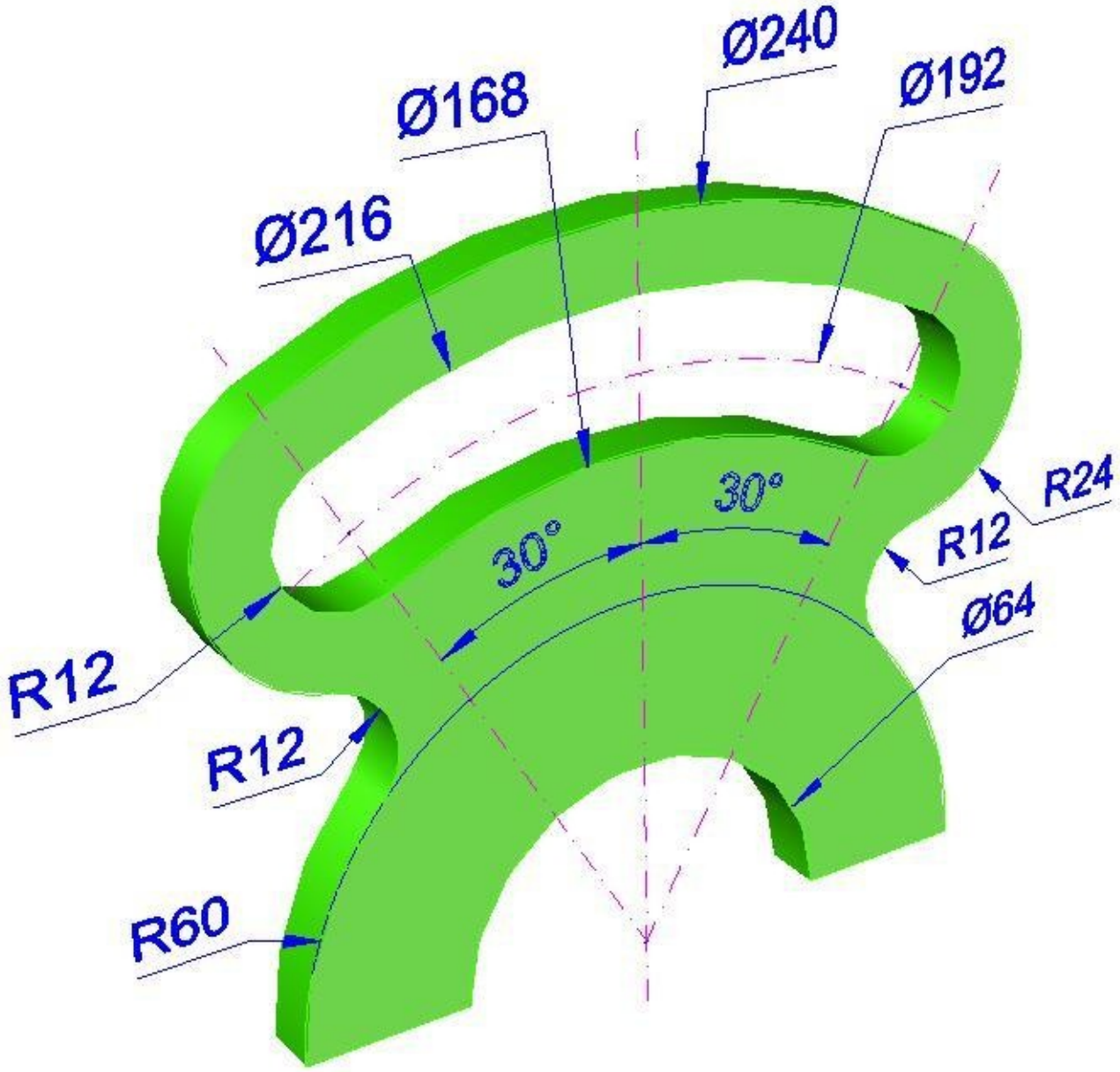
Ø240
Ø192
Ø168
Ø216
30°
30°
R24
R12
Ø64
R12
R12
R60